XCMG

ALL TERRAIN CRANE

XCA250G7-1E

SUPREME FIVE-AXLE CRANE

250 t | 76 m | 72 m | 114.5 m

V.1_2025

XCMG

COMPANY PROFILE

XCMG's Hoisting machinery division is the leader in China's lifting industry focusing on the research, development and the production of mobile cranes. At XCMG's core is a commitment to technological innovation while utilizing the latest digital technologies to push the boundaries of product development and production while following our principles of social responsibility, building a sustainable and better future, and to create value for our customers.

PRODUCT RANGE

XCMG's Hoisting machinery division boasts a complete product range. Our cranes are sold and serviced in more than 190 countries and regions worldwide, with export shares consistently leading the market.

WHEELED CRANE

- 5 t-220 t Truck crane
- 40 t-4000 t All Terrain Crane
- 25 t-150 t Rough Terrain Crane

CRAWLER CRANE

- 45 t-4000 t Lattice Crawler Crane
- 30 t-220 t Telescopic crawler crane

The five-axle 250 tonnage all terrain crane is widely used for installation of wind turbines, bridge lifting, petrochemical projects, tower crane disassembly, urban construction, building renovation, assisting in assembly/disassembly of crawler cranes, among others.

Economical operation

Able to carry 22 t counterweight on board during jobsite transfer

Equipped with handy independent jib head

Equipped with handy power unit

Efficient lifting

The seven-section boom with maximum length of 76 m is able to telescope with load

Coordinate dual-hook operation

Variable outrigger support

Precise control

Speed classification control: Automatically matching the optimal luffing, slewing, and lifting/lowering speeds. Higher safety is ensured.

Precise control for multi-axle coordinate steering: Higher precision, faster response.

Exclusive experience of intelligence and luxury

G-star cab: With brand-new human-machine interaction system in two cabs and super-large space, personnel can indulge in comfort.

CONTENTS

Product advantages and highlights	1-09
Dimensions	10-11
Technical specifications	12-13
Configuration and optional equipment	14
Weight	15
Working speed	16
Counterweight	17
Boom / Jib combinations	18-19
Load charts for boom	20-33
Table of main technical parameters	34-35
Description of symbols	36-37

ECONOMICAL OPERATION

G-ECO full-life cycle efficiency & economy

EFFICIENT JOBSITE TRANSFER

- 22 t counterweight, 35 t hook block, all outriggers and outrigger floats can be carried on board in the 82.5 t heavy-load jobsite transfer configuration, which reduces a trailer and operation costs.
- Handy 4 m independent jib head, lattice welded structure, stowed along with the vehicle without additional trailer, operation costs reduced.

ONE-MAN OPERATION OF THE MACHINE

- With the 12 configurations - wireless remote control, automatic counterweight hook-up, 360° panoramic camera, intelligent boom and jib, jib assist device, vibration lever, all-scenario monitoring system, all-scenario lighting system, handy independent jib head, automatic outrigger leveling, independent suspension lifting/lowering, and human-machine interaction system - one person is enough to easily operate the vehicle, thus operation efficiency is significantly improved.

WIRELESS REMOTE CONTROL FOR ALL MOVEMENTS

- Able to control main crane movements (telescoping, luffing, winch actions, slewing), auxiliary movements (operation's cab, counterweight cylinder), chassis outrigger operation, suspension operation, engine operation and lighting.

AUTOMATIC COUNTERWEIGHT HOOK-UP

- Slewing angle and counterweight position are detected automatically to inform the operator of real-time vehicle status. Counterweight hook-up can be performed automatically only by pressing buttons in the operator's cab. With the multi-aspect detection and control, operation becomes safer and more efficient.

NEW-GENERATION ELECTRO-HYDRAULIC ENERGY-SAVING CONTROL TECHNIQUE

- The intelligent coordination of hydraulic system and engine enables the engine to work at the optimal output power for all the time, reducing fuel consumption of superstructure.

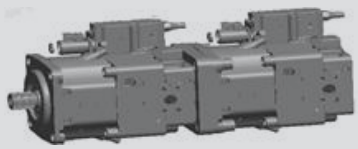

Exclusive large-displacement plunger pump, smartly matching the economical operation zone of the engine.
Low-speed, high-torque, better fuel-saving.

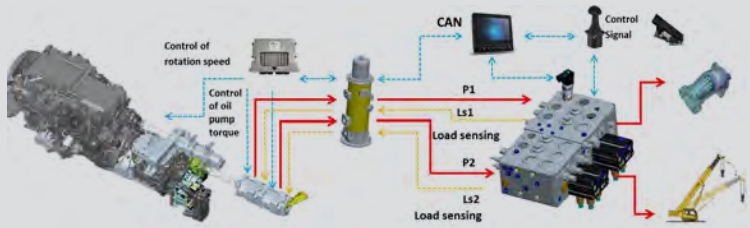

Self-adaptive control of pressure and flow under all OMs
Zero-loss & zero- waste of pressure

EQUIPPED WITH HANDY POWER UNIT (OPTIONAL)

- The traditional crane is empowered with electric operation capacities with zero emission, low noise, and less energy consumption, more suitable for construction at urban areas and at night.

HIGHLY INTEGRATED FOR EASIER ADDITION
PLUG AND USE, SAFE AND RELIABLE

EFFICIENT LIFTING

G-ICON intelligent control of all scenarios

SUPERB LIFTING PERFORMANCE

- The seven-section boom with maximum length of 76 m is able to perform lifting operation at 0° boom angle, with broad application scenarios.

TELESCOPING WITH LOAD

- The boom is able to safely telescope with load within operating range with comprehensive performance no less than 40% of rated capacity. Wider construction range is enabled, and efficiency is improved by 30%-50%, whilst lifting safety is guaranteed.

Telescoping with load OM is available for the scenario where height is limited.

COORDINATE DUAL-HOOK OPERATION

- For the need of lifting and overturning slender parts, the coordinate dual-hook operation mode is available for it, which can be achieved by a single crane, making the operation easier.

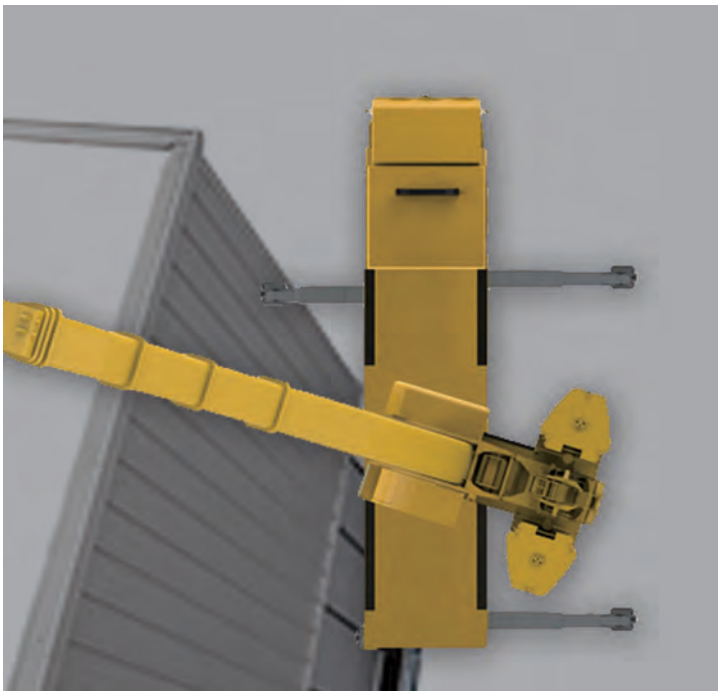

VARIABLE SUPPORTING TECHNOLOGY

- Different outrigger length (25%, 50%, 75%, or 100%) can be selected for each outrigger in accordance with the construction site, enabling more application scenarios, making the crane more adaptable to working at width-limited space.

PRECISE CONTROL

G-Master precise control under all OMs

PRECISE AND SMOOTH CONTROL UNDER ALL OMS

- With New-generation control system of smart pump-valve combination, high-precision winch integrated with 9-plunger motor, multi-stage pressure slewing buffer, and electro-hydraulic proportional smart telescoping, the overall handling performance is precise and smooth.

PRECISE FINE-CONTROL

Fine-control of winch, slewing and luffing reaches millimeter level.

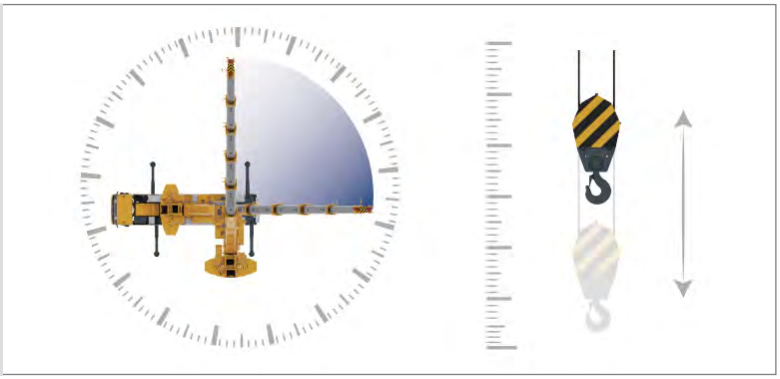

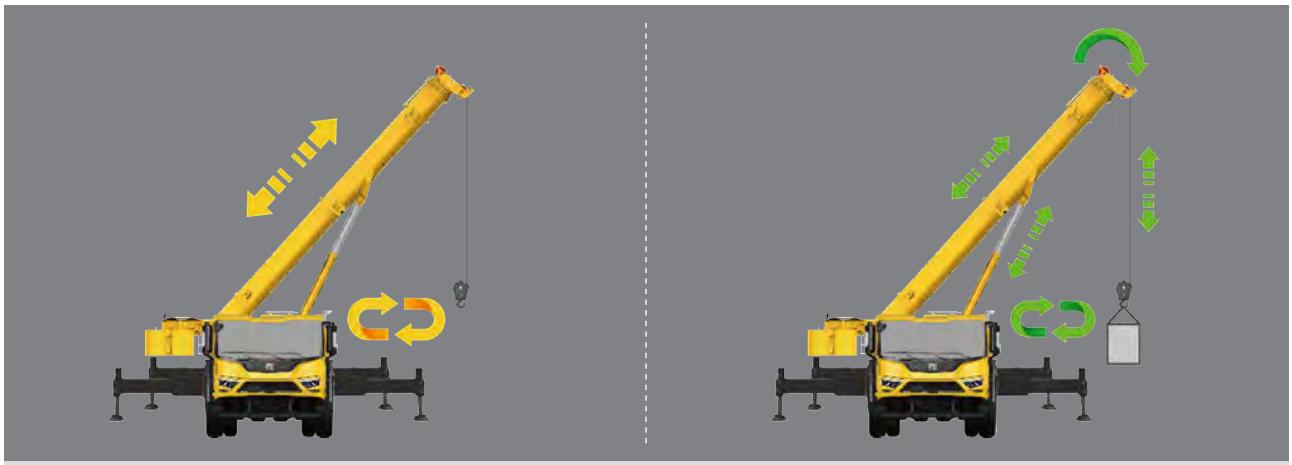

SMOOTH CONTROL

Fast response; Smooth starting, stopping & acceleration without impact generated.
Smooth slewing & telescoping.

ANY COMBINATIONS OF VARIOUS MOVEMENTS

Any combinations among slewing, telescoping, luffing and main/auxiliary winch.

OPERATION SPEED CLASSIFICATION CONTROL

- Smartly identifying light or heavy-load status, then automatically matching the optimal luffing, slewing and lifting/lowering speeds. Higher safety is ensured.

More stable speed of luffing without impact generated

Safer for high-speed slewing

Reduced sway for high-speed lifting

PRECISE CONTROL FOR MULTI-AXLE COORDINATE STEERING

- Steering precision control is improved by 65% with higher precision and faster response, whilst tire wear is reduced and its service life extended for one year.
- 6 steering modes: road steering / all-wheel steering / crab steering / independent rear axle steering / rear axle locked / reduced swing-out.

USER-FRIENDLY DESIGN FOR MAINTENANCE AND SERVICE

- Access locations are optimized according to ergonomic analysis. Platform, fixed ladder, handles, and handrail are set up at the turntable area for access to counterweight, upper surface of boom for maintenance of winch and operation of rope reeving. Several folding ladders are set up at chassis. Each ladder is able to bear stepping by a 150 kg personnel, meeting the requirements for climbing the vehicle under all OMs.

INTELLIGENT EXPERIENCE

G-COMFORT FULLY RELAXED AND COMFORTABLE

G-star cab: Brand-new styling; Great sealing performance; Super-large internal space; Super-wide filed of view; Super-abundant storage space; Plentiful configuration; Delicate process; High intelligence; Comfortable operation.

DRIVER'S CAB

①	Large-area windows	Reduced blind spots, improved driving safety.
②	Multi-functional air-suspension seats for both the driver and co-driver	With electric heating, electric ventilation, inflatable air support for waist, and adjustable function, the seats are more comfortable.
③	Brand-new combined instrument panel	With the 12-inch central control touch display, 12.3-inch full LCD display, and new UI interface, it is easier for operation.
④	Multi-function steering wheel	Adjustable in height and horizontal distance, and with cruise and multimedia integrated, the steering wheel is easy and convenient for handling.
⑤	High-power HVAC, integrated air outlet	Able to blow air to face & feet, defrost, and defog, making cab inner temperature more even, with higher efficiency in cooling and heating.
⑥	Multi-storage space	Meeting the demands for storing a dozen objects such as drinking cup, mobile phone, and receipts, among others.
⑦	Other user-friendly configurations	Configurations such as electric rearview mirror, mobile phone support, wireless unlocking key, refrigerator and others are equipped, making a more comfortable driving experience.

OPERATOR'S CAB

①	Openable front windshield Safety glass with super-wide filed of view	Upper and lower view limits are expanded.
②	Adjustable seat with mechanical shock absorber	With leather + breathable mesh fabric material, and adjustable function, it becomes extremely comfortable.
③	High-power horizontal HVAC	Able to blow air to face & feet, defrost, and defog, making cab inner temperature more even, with higher efficiency in cooling and heating.
④	Brand-new human-machine interaction system	Main and auxiliary control panels are arranged divisionally. The 12.1-inch color touch screen and 7-inch winch monitoring screen are adjustable in angle. And with functions like automatic load planning and fault self-diagnosis integrated, the interaction system are easier to use.
⑤	Vibration lever	With newly-developed ergonomic vibration lever, handling is easy and operation is precise.
⑥	Other user-friendly configurations	The push-pull sliding door, electric side step, and wireless unlocking key make getting on/off the vehicle more convenient.

SAFE AND RELIABLE

G-Safe full-service life quality safety

FULL-SERVICE LIFE STRUCTURAL SAFETY DESIGN

DEFORMATION CONTROL FOR ENTIRE MACHINE

More appropriate structural arrangement; Deformation decreased by 30%; Safer operation.

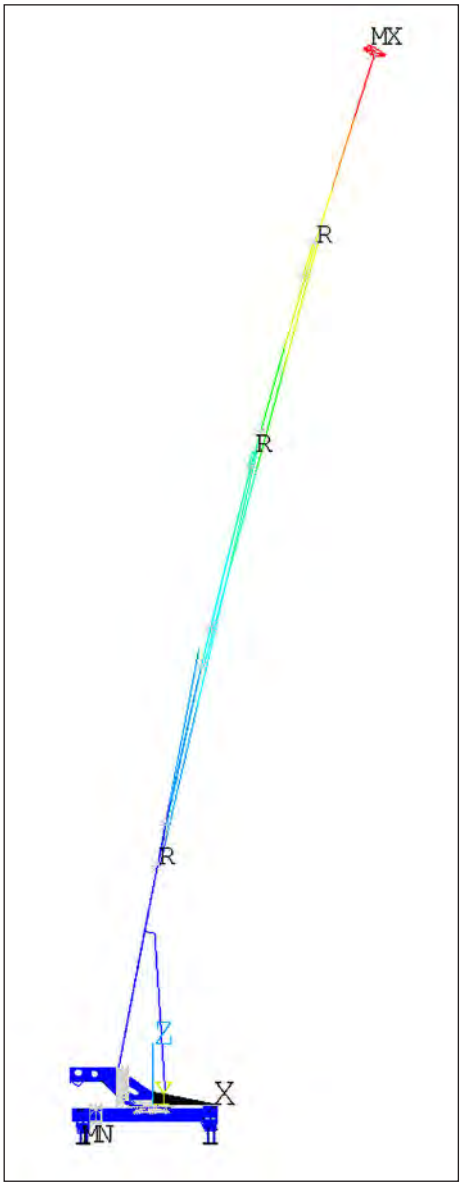

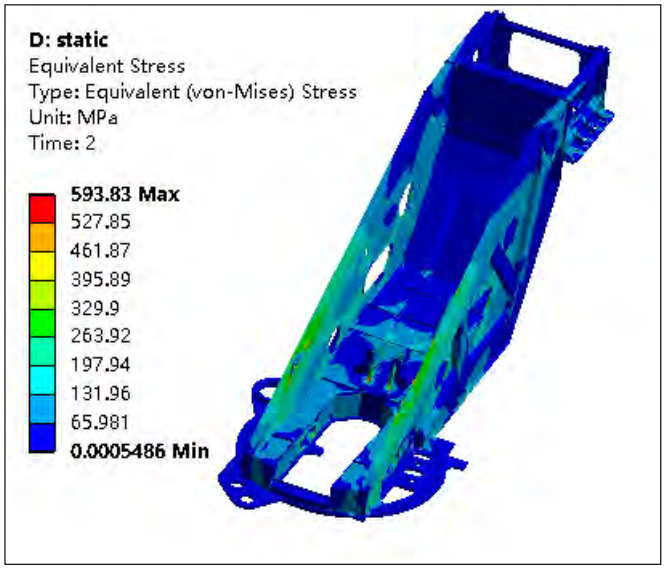

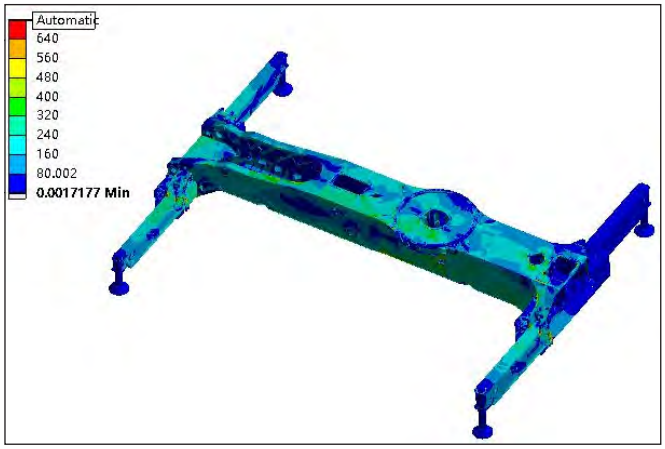

STRESS EVENLY-DISTRIBUTED CONTROL TECHNIQUE FOR STRUCTURAL PARTS

Stress of structural parts is evenly distributed, enabling stronger load-bearing capacity, and the service lives are over 1.6 times longer than benchmark.

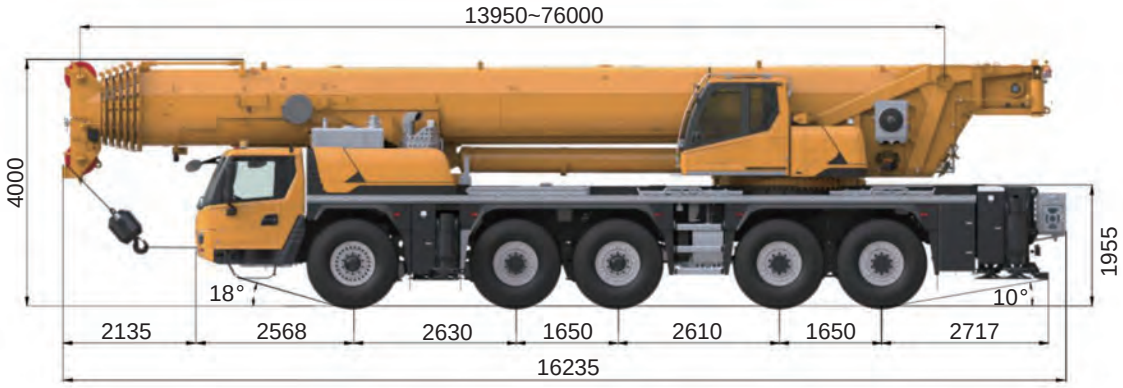

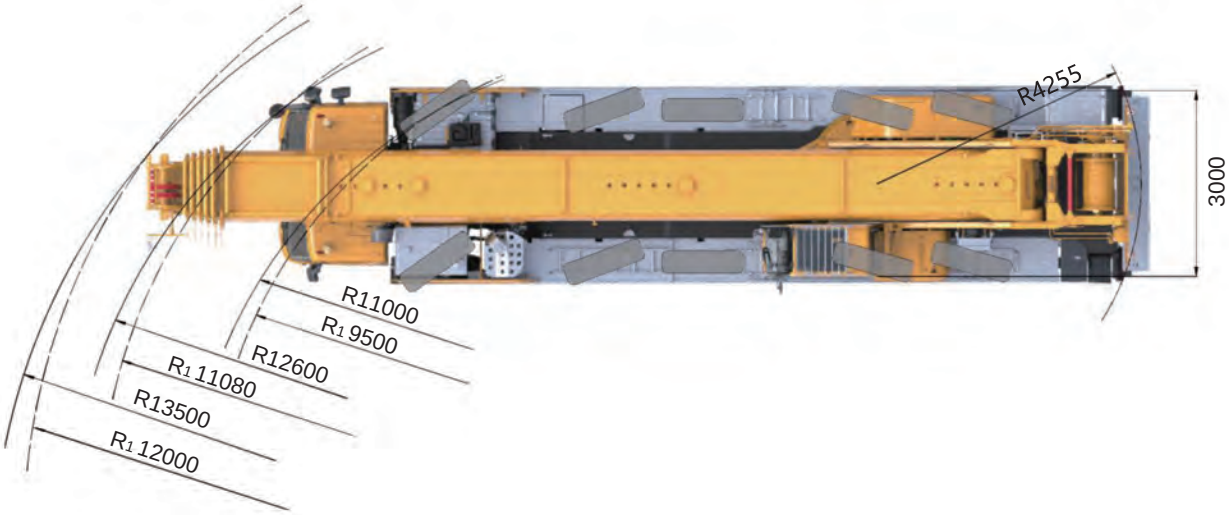

R: turning radius in the normal road steering mode; R1: turning radius in the all-wheel steering mode.

DIMENSIONS

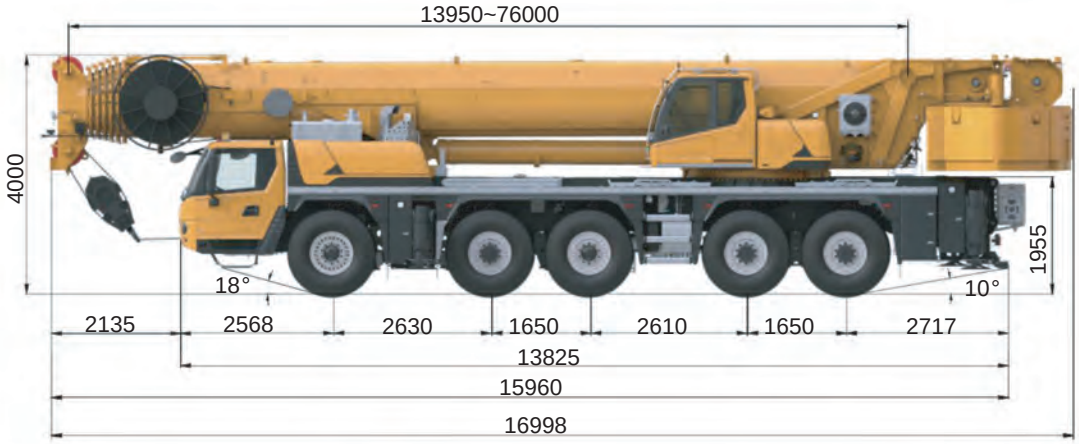
13950~76000
4000
1955
18°
10°
2135
2568
2630
1650
2610
1650
2717
13825
15960
16998

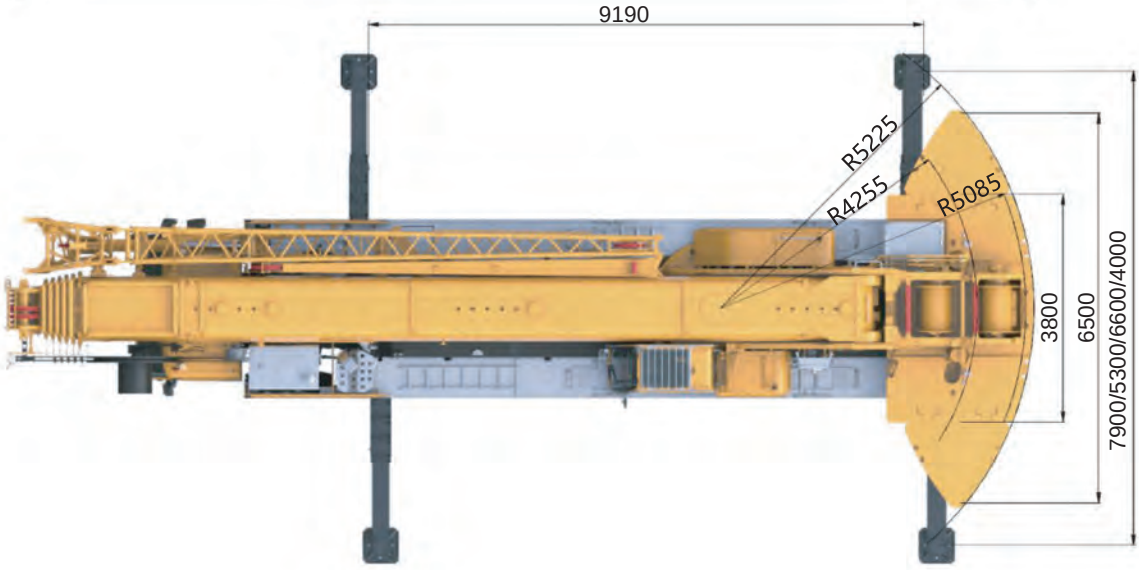
9190
R5225
R4255
R5085
3800
6500
7900/5300/6600/4000

	CHASSIS
Vehicle frame	Designed and manufactured by XCMG, the frame is made of high strength steel with fully covered walking surface and anti-torsion box-typed structure.
Outrigger	4 outriggers arranged in H-shape are hydraulically controlled. Double-stage outriggers are adopted. The chassis adopts wireless outrigger controller where level gauge and speed-regulating buttons are mounted. There is a check valve fitted in each outrigger cylinder, and a double-way hydraulic lock fitted in each jack cylinder. Float dimension: 600 mm × 600 mm
Engine	OM471LA.E5-1, in-line, six-cylinder, water cooled, electric-control diesel engine, made by Daimler AG, with maximum net power / rpm of 390 kW / 1600 rpm, and maximum torque / rpm of 2600 Nm / 1300 rpm; Compliant to off-road Euro Stage V emission standard; Fuel tank capacity: 485 L. AdBlue/DEF tank capacity: 40 L. Engine displacement: 12.8 L.
Hydraulic system	The pump set, connected to the PTO port of the engine, controls the outriggers, steering system, suspension and independent hydraulic cooling system.
Transmission	ZF Germany automatic transmission with retarder brake; 12 forward gears and 2 reverse gears available.
Transfer case	Mechanical transfer case, with high/low speeds, is equipped with emergency steering pump.
Safety devices	Reversing camera, 360° camera, ABS, outrigger length measuring, outrigger pressure detector, axle load detector, among others.
Axle	High-strength axles, equipped with disc brake; Axles 2, 4, 5 are drive axles. Drive/steering type: 10×6×10.
Suspension	All axles adopt hydro-pneumatic suspension system which has good shock-absorbing effect. Various functions such as automatic leveling, moving up and down of suspension, and switching of locked and unlocked suspension are available. The stroke of suspension cylinder: -100 mm~+150 mm.
Tire	10 tires and 1 spare tire, each axle is equipped with single tire, with large bearing capacity. Tire specifications: 445/95R25.
Braking system	Service brake: dual-circuit pneumatic brake brake, acting on all wheels. Parking brake: spring brake, acting on wheels of axles 2-5. Auxiliary brake: engine retarder brake, transmission retarder brake; safe and reliable, with longer service life of brake lining.
Steering	All axles steering, advanced technology of electro-hydraulic proportional steering control is suitable for various demands of operation modes and several steering modes can be realized.
Driver's cab	New full dimension steel structure cab is equipped with safety glass, electrically operated door window lifter, electric heating rearview mirrors, remote control unlocking function, pneumatic adjustable steering column, multi-functional steering wheel, multi-functional air suspension seats for both driver and co-driver, LED headlights, new combined central control panel, 12.3-inch LCD display, 12-inch central control display, fire extinguisher and HVAC.
Electrical system	DC 24 V, with 2 sets of 12 V batteries in series.

TECHNICAL SPECIFICATIONS

	SUPERSTRUCTURE
Structure	Designed and manufactured by XCMG, made of high strength steel.
Hydraulic system	The chassis engine drives the variable plunger pump via transmission to perform lifting, luffing, telescoping and slewing operations. The Load-sensitive electro-hydraulic directional valve is adopted to perfectly match the variable plunger pump to achieve stable start and stop. It has great performance for simultaneous crane movements. The electric air-cooled hydraulic oil cooler is adopted to effectively reduce oil temperature. Effective capacity of hydraulic oil tank: 750 L.
Control system	Pilot electric proportional control, stepless speed regulation; Main crane movements are controlled by 2 vibration levers at left and right sides and virtual buttons on the display screen.
Main winch system	Hydraulic control is used for speed regulation. The system is driven by a hydraulic motor through a planetary gear reducer, with a normally closed brake, a counterbalance valve and a grooved drum equipped. The main and auxiliary winches can be operated separately. Wire rope end, directly installed in pouch socket.
Slewing system	A single-row, four-point contact-ball external slewing bearing with a dual slewing mechanism is driven by hydraulic motor, with built-in planetary gear reducer and constant-closed brake equipped, and can continuously slew 360°. Power control and free slewing function as well as proportional brake and stepless speed regulation are available.
Operator's cab	Steel enclosed operator's cab tiltable up to 20°. Spacious interiors, expansive visibility, and abundant storage space. All-round view safety glass with an openable front window. Push-pull sliding door, protective grilles, push-pull sliding side steps. Wipers are fitted for the windshield and roof window. And the washer fluid reservoir capacity is 2.5 L. Stylish interior design; 2 kg fire extinguisher; Sun screens for front, rear and side windows; Double-layer sun screen for the roof window. Mechanical shock absorber seat with leather + breathable mesh is adjustable. Double-LED interior lights, electric fan. Equipped with human-machine interaction control panel, display, armrests, and suspended electronic foot throttle. HVAC is equipped.
Safety devices	Hydraulic counterbalance valve, hydraulic relief valve, hydraulic double-way lock, load moment indicator (LMI), angle sensor, winch monitoring camera, slewing buzzer, lowering limiter to prevent rope over-releasing, anti-two block on the boom head to prevent rope over-winding and anemometer to detect the wind speed.
Electrical system	DC 24 V, with 2 sets of 12 V batteries in series.
Load moment indicator (LMI)	When the actual load moment is approaching the overloading value, audible and visual warning will be sent out, and the dangerous operation will be automatically cut off before overloading occurs. Overload memory function (black box) and fault diagnosis function are available.
Counterweight	Total weight is 80 t. Eight counterweight combinations of 0 t, 10 t, 17.5 t, 22 t, 37 t, 47 t, 57 t and 80 t are available.
Hook block	11 t hook block, 35 t hook block, 80 t hook block. Matching 22 mm wire rope; Interchangeable with hook blocks of 250 t products.
Wireless remote controller	Full-function wireless remote control device can be used to perform main operations (telescoping, luffing, winch, slewing), auxiliary operations (operator's cab, counterweight cylinder, folding and unfolding of swing-away jib), chassis outrigger operation, engine operation and light control, improving the convenience and safety of crane operations.
Luffing system	Single cylinder is used for luffing the boom, with self-compensation counterbalance valve.
Boom	7-section boom with U-shaped cross-section, welded structure. Single-cylinder pinning telescoping system is adopted. One double-acting cylinder with safety valve is used for controlling the telescoping movements of all boom sections with various telescoping pattern available. Boom length: 14 m ~ 76 m.

CONFIGURATION	FUNCTION DESCRIPTION
Standard	Seven-section 76 m boom
Note: only standard configuration is available for this model.	

OPTIONAL EQUIPMENT

Hook block	170 t hook block, , 125 t hook block, 12 t hook block.
Auxiliary winch system	Hydraulic control is used for speed regulation. The system is driven by a hydraulic motor through a planetary gear reducer, with a normally closed brake, a counterbalance valve and a grooved drum equipped. Independently operated from the main winch.
Jib of hydraulic adjustment	The two-section swing-away jib, whose first section is of lattice structure while the second of box-type structure, contains jib assist cylinder, and has three offset angles of 0°, 20° and 40°. Jib length: 10 m or 17 m.
Hydraulic jib extension	8 m, 8 m, 12 m.
Independent jib head	Lattice welded structure, attached to boom head Length of independent jib head: 4 m.
Electric eddy current	Installed at the axle 5.
Configuration of four-axle drive	Axles 2, 3, 4, 5 are drive axles.
Heating system	Independent heating for driver's cab.
Rear towing device	18 t
Tire stopper	4 in total
Spark arrestor	Installed at the exhaust pipe.
Heating system of coolant	Acting on engine coolant circulation system, and used for preheating under low temperature for engine starting.
Hydraulic-type electric power unit	Able to operate with plug-in and all-electric power.

WEIGHT

TRAVEL CONFIGURATION ON ROAD

≤12 t ≤12 t ≤12 t ≤12 t ≤12 t

0 t

60 t

80 km/h

11 t

CONFIGURATION FOR HEAVY LOAD JOBSITE TRANSFER

≤16.5 t ≤16.5 t ≤16.5 t ≤16.5 t ≤16.5 t

22 t

82.5 t

30 km/h

35 t

445/95R25	80 km/h	60%

	Max	F	Φ	
1	0-130 m/min, single line, 5th layer	107.8 kN	22 mm	300 m
2	0-130 m/min, single line, 5th layer	107.8 kN	22 mm	250 m
	0-1.3 r/min			
	Approx. 60 s for boom luffing up from 0° to 82.5°			
	Approx. 650 s for boom extending from 14 m to 76 m			

WEIGHT

	PARTS OF LINE	HOOK BLOCK WEIGHT (KG)	Hook block dimension (mm)	NOTES
170 t	15	1920	2076×606×842	Dual-hook
125 t	11	1500	1886×581×754	Dual-hook
80 t	7	1000	1751×599×436	Dual-hook
35 t	3	600	1366×599×353	Dual-hook
12 t	1	350	910×450×450	Single-hook
11 t	1	227	896×400×400	Single-hook

COUNTERWEIGHT

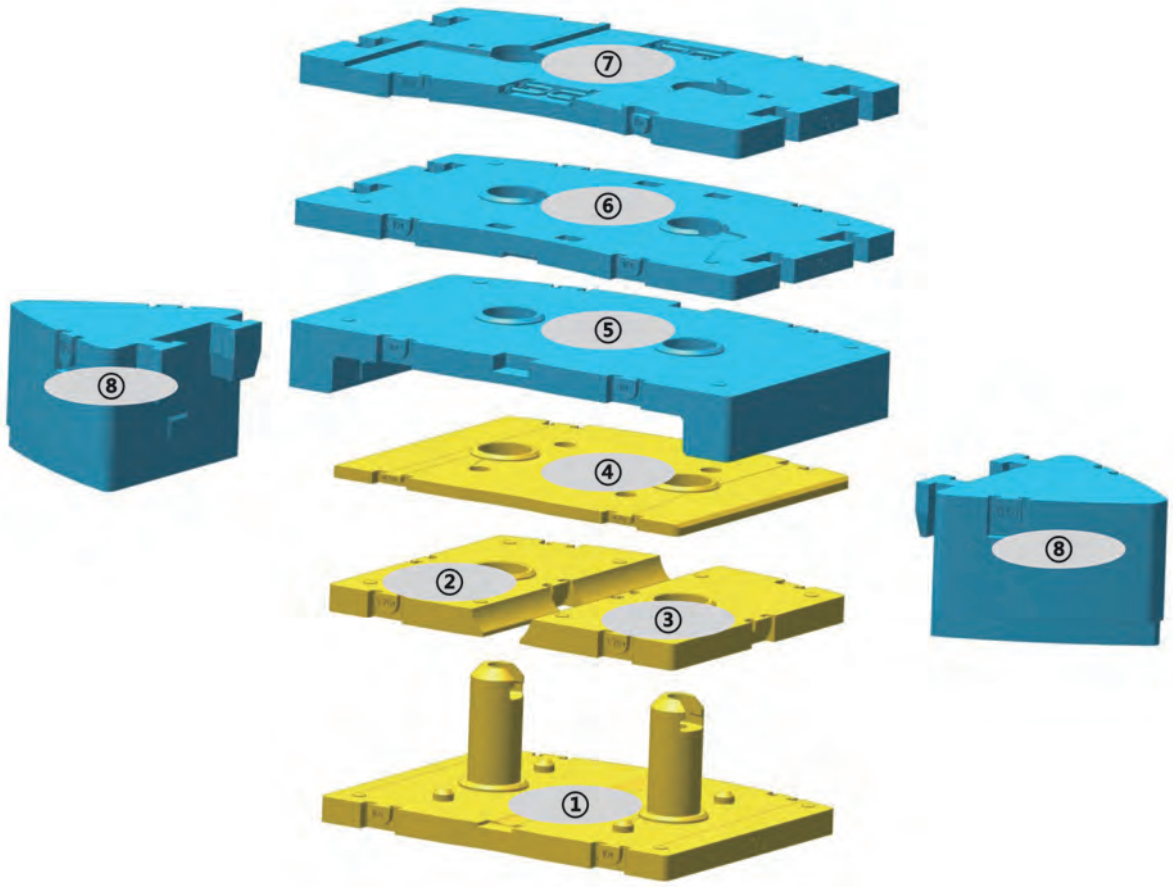

	①	②	③	④	⑤	⑥	⑦	⑧
Dimensions (L×W×H) (mm)	2980×2395 ×1067	2438×1330 ×227	2438×1330 ×227	2980×2440 ×120	3800×2440 ×515	3800×2440 ×213	3800×2440 ×210	1737×1685 ×1050
Weight (t)	10	3.75	3.75	4.5	15	10	10	11.5

Operation mode	80 T	57 T	47 T	37 T	22 T	17.5 T	10 T	0 T
Combination	① + ② + ③ + ④ + ⑤ + ⑥ + ⑦ + ⑧ ×2	① + ② + ③ + ④ + ⑤ + ⑥ + ⑦	① + ② + ③ + ④ + ⑤ + ⑥	① + ② + ③ + ④ + ⑤	① + ② + ③ + ④	① + ② + ③	①	——

Note: the yellow counterweight slabs can be carried during heavy-load jobsite transfer, and blue slabs cannot be carried.

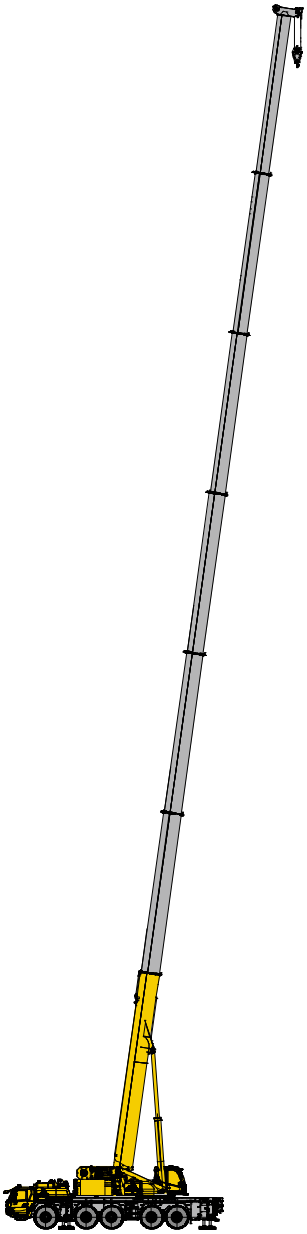

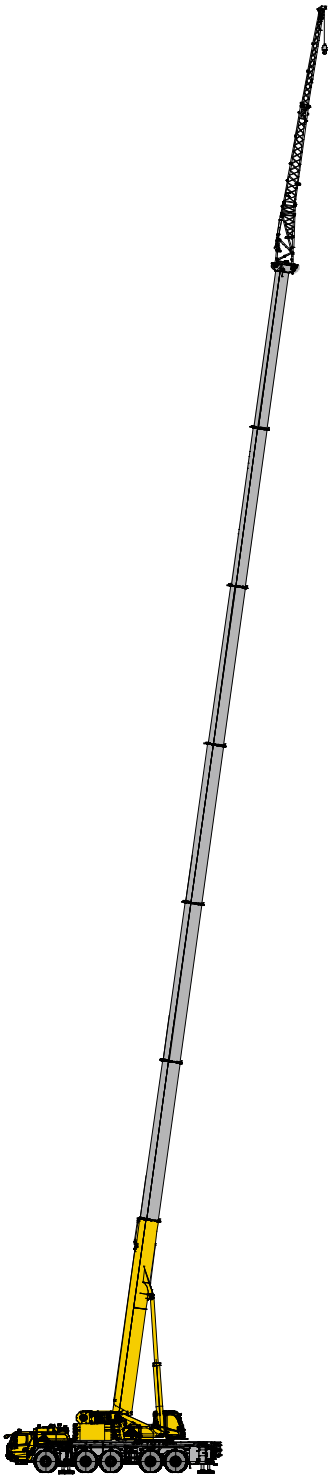

Boom	Boom + jib
T: 14-76 m	T: 14-76 m F: 10m/17m

BOOM /JIB COMBINATIONS

COMPONENTS	STRUCTURE	LENGTH (m)
1st jib section		10
2nd jib section		7
Extension I		8
Extension II	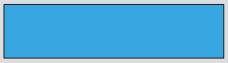	8
Extension III		12

Jib – 10 m	
Jib – 17 m	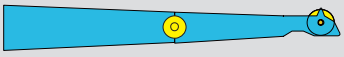
Boom extension I + jib – 25 m	
Boom extension III + jib – 29 m	
Boom extension I + boom extension II + jib – 33 m	
Boom extension I + boom extension III + jib – 37 m	
Boom extension I + boom extension II + boom extension III + jib – 45 m	

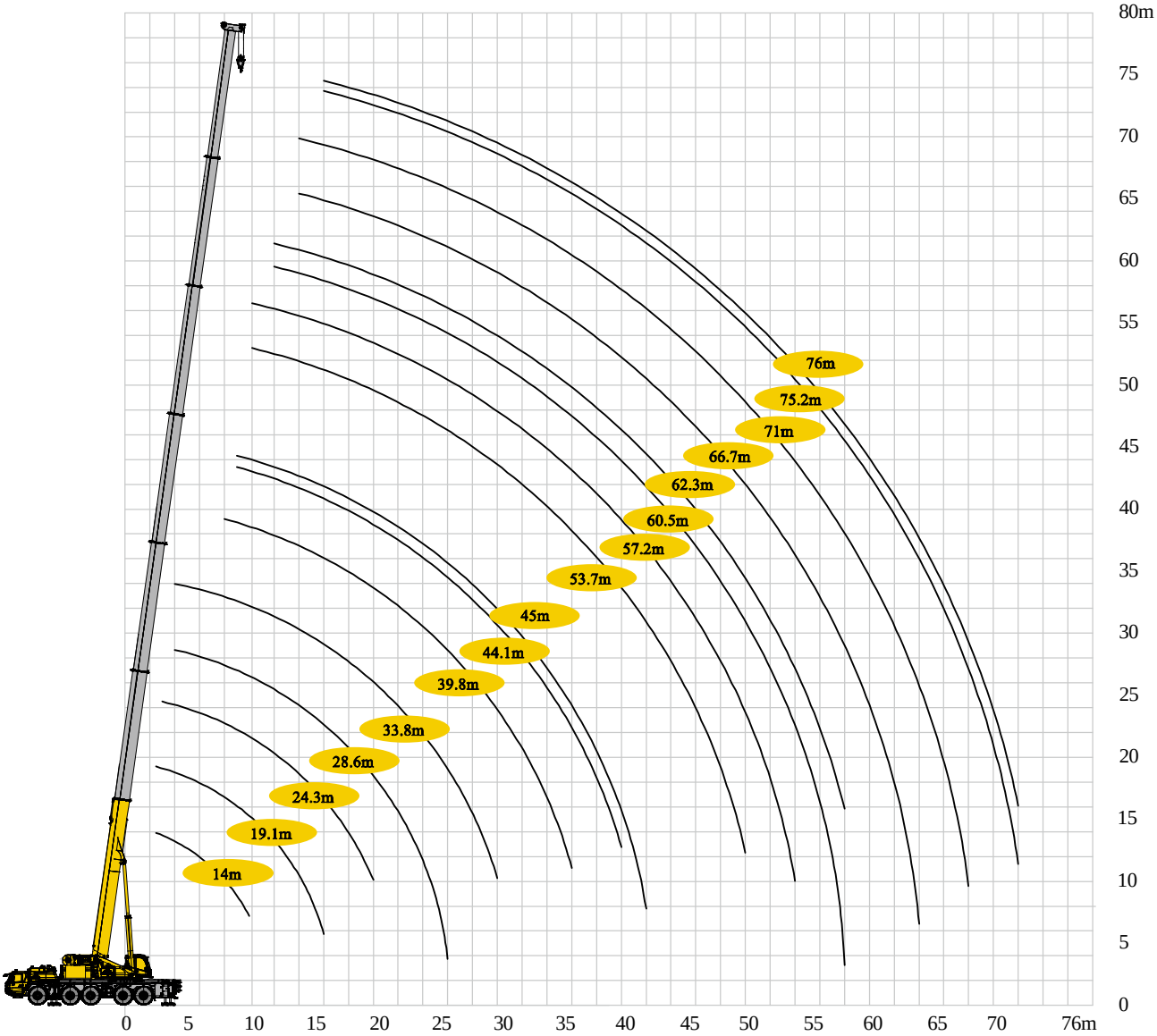
80m
75
70
65
60
55
50
45
40
35
30
25
20
15
10
5
0
0
5
10
15
20
25
30
35
40
45
50
55
60
65
70
76m
76m
75.2m
71m
66.7m
62.3m
60.5m
57.2m
53.7m
45m
44.1m
39.8m
33.8m
28.6m
24.3m
19.1m
14m

LOAD CHARTS

T 14.0~76M

	14.0*	14.0	19.1	24.3	28.6	33.8	39.8	44.1	45	53.7	57.2	60.5	62.3	66.7	71	75.2	76	
2.5	250**	134.0	124.0															2.5
3	137.5	134.0	124.0	101.0														3
3.5	136.0	134.0	124.0	101.0														3.5
4	135.0	131.0	124.0	101.0	91.0	53.4												4
4.5	131.8	125.0	122.9	101.0	91.0	51.2												4.5
5	123.7	117.0	114.1	101.0	91.0	49.1												5
6	109.5	102.4	100.4	97.5	86.8	72.0												6
7	97.4	90.7	89.7	87.8	76.9	72.0												7
8	86.3	81.9	80.9	79.0	67.0	62.9	62.5											8
9	76.3	74.1	73.1	71.2	63.2	59.2	62.5	52.5	52.5									9
10	65.2	63.9	67.3	65.3	59.5	55.5	61.4	48.8	51.2	38.3	27.0							10
12			57.5	55.6	52.5	48.1	52.7	40.4	47.3	35.2	27.0	18.6	21.7					12
14			48.5	48.5	45.5	40.7	45.8	36.7	43.7	32.0	27.0	17.6	21.7	17.6	14.7			14
16			34.2	41.8	38.5	33.3	39.0	33.0	39.0	28.9	26.6	16.6	21.7	17.6	14.7	12.1	11.5	16
18				36.1	35.1	30.3	34.2	30.0	34.1	25.7	24.5	15.6	21.7	17.6	14.7	12.1	11.5	18
20				31.1	31.2	27.6	31.6	26.9	31.2	22.6	21.3	14.6	20.9	17.5	14.7	12.0	11.4	20
22					26.9	24.9	29.3	23.8	27.3	20.9	20.4	13.8	18.4	16.7	14.2	12.0	11.4	22
24					23.0	22.3	26.2	22.1	25.4	19.4	18.6	13.0	17.1	15.8	13.7	12.0	11.4	24
26					14.3	21.3	23.3	20.4	22.4	18.1	17.1	12.2	15.8	14.6	13.2	11.7	11.4	26
28						18.8	20.8	18.6	20.0	16.7	15.8	11.2	14.6	13.6	12.6	11.1	11.2	28
30						15.3	18.8	16.9	18.0	15.4	13.2	10.5	13.3	12.5	11.7	10.2	10.2	30
32							17.0	15.2	16.2	14.9	13.6	9.8	12.3	11.6	10.8	9.8	9.7	32
34							15.4	13.6	14.6	13.9	12.6	9.2	11.5	10.8	10.0	9.1	9.0	34
36							12.7	12.3	13.3	13.1	11.8	8.6	10.7	10.0	9.3	8.5	8.4	36
38								11.3	12.1	11.9	11.0	8.1	10.0	9.3	8.7	8.0	7.9	38
40								10.5	11.0	10.8	9.3	7.7	9.5	8.7	8.2	7.5	7.4	40
42									6.5	9.9	8.7	7.3	8.9	8.2	7.7	7.1	7.0	42
44										9.0	8.3	6.9	8.4	7.8	7.3	6.6	6.6	44
46										8.2	7.8	6.5	8.0	7.3	6.9	6.2	6.2	46
48										7.5	7.2	6.1	7.6	6.9	6.5	5.8	5.8	48
50										5.8	7.0	5.9	7.2	6.5	6.1	5.5	5.4	50
52											6.7	5.6	6.9	6.2	5.7	5.1	5.1	52
54											5.6	5.3	6.7	5.9	5.2	5.0	4.8	54
56												5.1	6.4	5.6	4.9	4.6	4.2	56
58												1.2	5.9	5.3	4.6	4.4	4.2	58
60														5.1	4.3	4.1	4.0	60
62														4.8	4	3.9	3.8	62
64														1.2	4.0	3.5	3.1	64
66															3.7	3.5	3.1	66
68															1.4	3.2	3.1	68
70																3.1	3.0	70
72																1.4	2.1	72

*Over rear **Capacity class

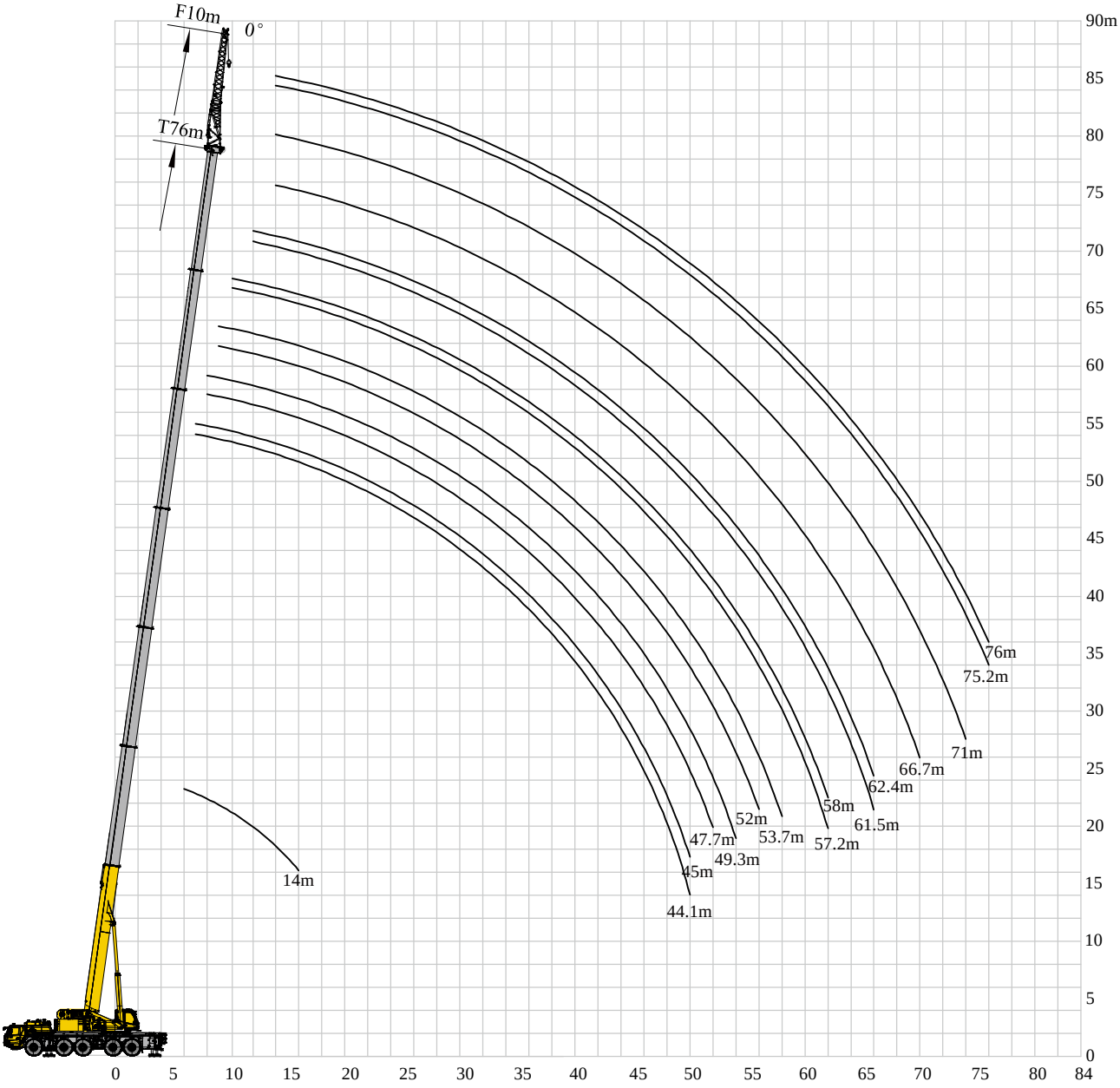
F10m
0°
T76m
90m
85
80
75
70
65
60
55
50
45
40
35
30
25
20
15
10
5
0
0
5
10
15
20
25
30
35
40
45
50
55
60
65
70
75
80
84
76m
75.2m
71m
66.7m
62.4m
61.5m
58m
57.2m
53.7m
52m
49.3m
47.7m
45m
44.1m
14m

LOAD CHARTS

T 14~76M

	14	44.1	45	47.7	49.3	52	53.7	57.2	58	61.5	62.3	66.7	71	75.2	76	
6	18.5															6
7	17.3	16.7	16.3													7
8	16.2	16.7	16.2	12	14.9											8
9	15.1	16.7	16.1	12	14.8	11.1	13.7									9
10	14.2	16.7	16.1	12	14.7	11	13.5	10.3	11.9							10
12	12.2	16.6	15.8	12	14.6	10.9	13.2	10.2	11.7	9.5	10.2					12
14	10.5	16.1	15.5	11.8	14.4	10.8	13	10.1	11.7	9.4	10.2	8.8	7.1	6.2	5.8	14
16	9.5	15.2	14.8	11.8	14.2	10.7	12.8	10	11.6	9.2	10.1	8.8	7.1	6.2	5.8	16
18		14.4	14	11.2	13.8	10.6	12.7	10	11.5	9.2	10	8.8	7.1	6.2	5.8	18
20		13.6	13.3	10.3	13.3	10	12.6	9.9	11.4	9.2	10	8.8	7.1	6.2	5.8	20
22		12.9	12.6	9.4	12.7	9.2	12.5	9.9	11.3	9.1	10	8.7	7.1	6.2	5.8	22
24		12.3	12.1	8.6	12.1	8.4	12.1	9.1	11.1	9.1	9.9	8.7	7.1	6.2	5.8	24
26		11.6	11.4	8	11.6	7.8	11.6	8.5	11	8.4	9.9	8.7	7.1	6.2	5.8	26
28		10.8	10.7	7.4	11.2	7.3	11.2	7.9	11	7.8	9.7	8.7	7.1	6.2	5.8	28
30		10.1	10	6.9	10.6	6.7	10.8	7.3	10.2	7.3	9.1	8.1	7.1	6.2	5.8	30
32		9.7	9.6	6.4	9.9	6.3	10.3	6.8	9.5	6.7	8.4	7.5	6.7	6.2	5.8	32
34		9.2	9.1	6	9.6	5.9	9.9	6.4	9	6.4	7.9	7	6.2	5.8	5.6	34
36		8.7	8.7	5.7	9.1	5.5	9.5	6	8.3	6	7.3	6.5	5.9	5.5	5.1	36
38		8.3	8.2	5.4	8.6	5.1	9.1	5.6	7.8	5.6	6.9	6.2	5.5	5.1	4.8	38
40		7.9	7.8	5	8.3	4.9	8.6	5.3	7.4	5.3	6.4	5.8	5.1	4.7	4.5	40
42		7.5	7.4	4.8	7.8	4.6	8.1	5	7	5	6.1	5.4	4.8	4.4	4.2	42
44		7.2	7.1	4.5	7.5	4.3	7.7	4.8	6.6	4.7	5.7	5.1	4.5	4.2	3.9	44
46		6.8	6.8	4.3	7.2	4.1	7.2	4.6	6.2	4.4	5.4	4.8	4.2	4	3.7	46
48		6.4	6.5	4.1	6.8	4	6.4	4.3	5.8	4.3	5.1	4.5	4	3.7	3.5	48
50		4.7	4.7	4	6.2	3.8	6	4.1	5.6	4	4.7	4.3	3.8	3.5	3.2	50
52				3.7	5.7	3.6	5.5	4	5.3	3.9	4.5	4	3.6	3.3	3.1	52
54					5.2	3.4	5	3.7	4.9	3.7	4.3	3.8	3.4	3.2	2.9	54
56						3.3	4.5	3.6	4.5	3.5	4.1	3.7	3.2	3	2.7	56
58							4.1	3.5	4.1	3.4	3.9	3.5	3	2.9	2.6	58
60								3.4	3.7	3.2	3.6	3.3	2.8	2.6	2.5	60
62								3.2	3.3	3	3.4	3.1	2.7	2.5	2.2	62
64										2.9	3.1	3	2.6	2.4	2.1	64
66										2.8	2.8	2.9	2.4	2.3	2	66
68												2.6	2.3	2.1	1.9	68
70												2.4	2.2	2	1.8	70
72													2.1	1.9	1.6	72
74													1.9	1.8	1.6	74
76														1.7	1.4	76

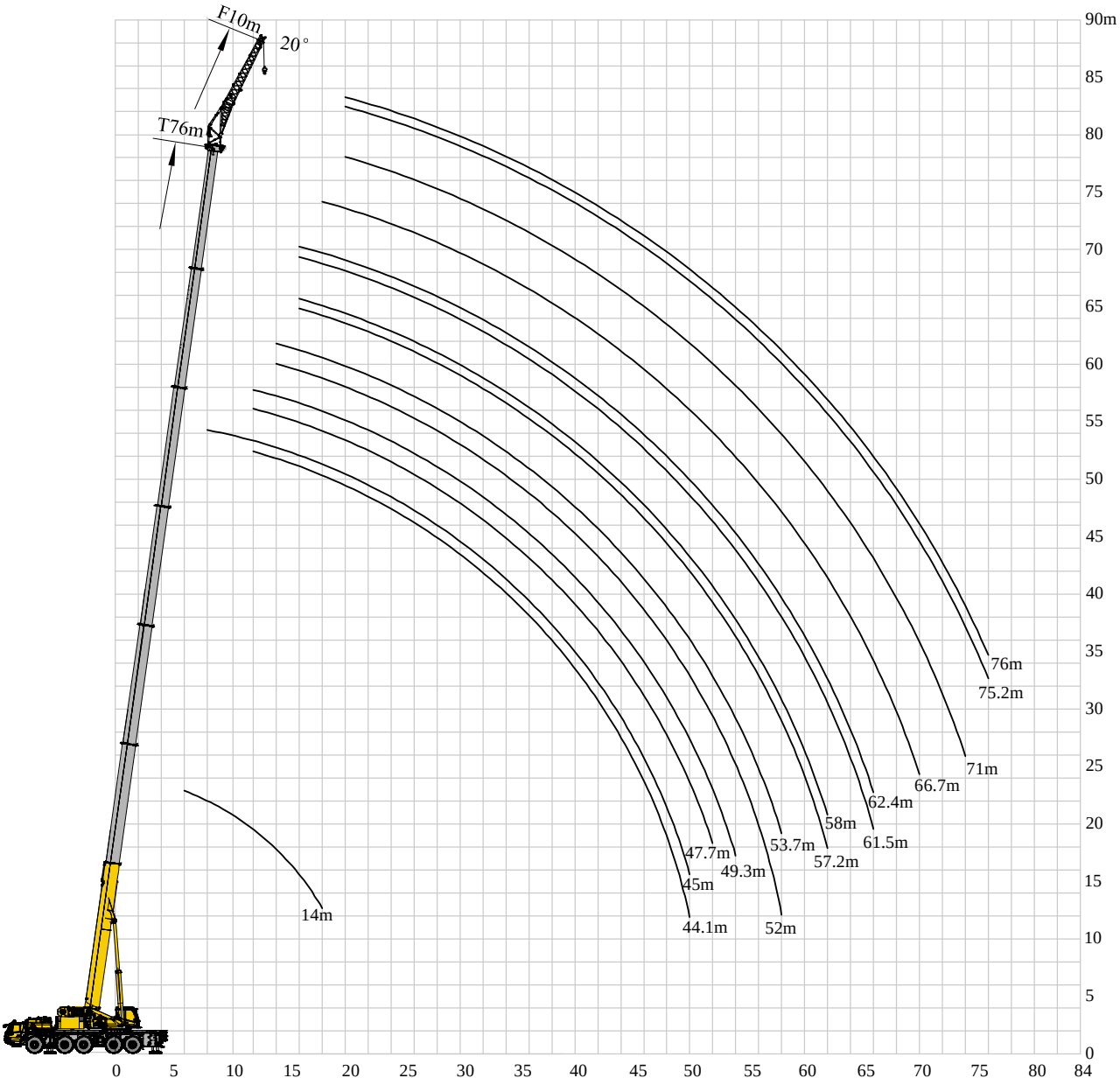
F10m
20°
T76m
90m
85
80
75
70
65
60
55
50
45
40
35
30
25
20
15
10
5
0
0
5
10
15
20
25
30
35
40
45
50
55
60
65
70
75
80
84
76m
75.2m
71m
66.7m
62.4m
61.5m
58m
57.2m
53.7m
52m
49.3m
47.7m
45m
44.1m
14m

LOAD CHARTS

T 14~76M

	14	44.1	45	47.7	49.3	52	53.7	57.2	58	61.5	62.3	66.7	71	75.2	76	
6	13.3															6
7	12.6															7
8	12.1															8
9	11.6															9
10	11.1															10
12	10.3	11.9	11.7	10.1	11.6											12
14	9.8	11.4	11.2	10	11.1	9.2	10.6									14
16	8.9	10.9	10.8	9.9	10.7	9.1	10.5	8.3	9.7	8.1	8.6					16
18		10.6	10.5	9.8	10.4	9.1	10.3	8.3	9.7	8	8.6	7.6				18
20		10.1	10	9.5	10.1	9.1	10	8.3	9.6	7.9	8.5	7.5	6.6	5.9	5.4	20
22		9.8	9.8	9	9.8	8.8	9.8	8.3	9.5	7.9	8.5	7.5	6.5	5.9	5.4	22
24		9.6	9.5	8.4	9.5	8.1	9.5	8.3	9.4	7.9	8.5	7.5	6.4	5.9	5.4	24
26		9.3	9.2	7.8	9.3	7.5	9.3	8.3	9.2	7.9	8.4	7.5	6.4	5.9	5.4	26
28		9	9	7.2	9.1	7	9	7.6	9	7.7	8.4	7.5	6.4	5.9	5.4	28
30		8.8	8.8	6.8	8.8	6.6	8.9	7.2	8.8	7.1	8.4	7.5	6.4	5.9	5.4	30
32		8.5	8.5	6.4	8.6	6.1	8.7	6.7	8.6	6.7	8.4	7.5	6.4	5.9	5.4	32
34		8.1	8.1	5.9	8.3	5.7	8.4	6.3	8.5	6.3	7.8	6.9	6.2	5.8	5.4	34
36		7.8	7.8	5.6	8	5.4	8.1	5.9	8.2	5.9	7.4	6.5	5.8	5.4	5.4	36
38		7.6	7.4	5.3	7.7	5	7.9	5.6	7.9	5.6	6.9	6.1	5.4	5.1	5	38
40		7.2	7.3	5	7.5	4.9	7.6	5.3	7.5	5.2	6.5	5.7	5.1	4.7	4.7	40
42		7.1	6.9	4.8	7.2	4.5	7.4	5.1	7.1	5	6.2	5.4	4.7	4.4	4.4	42
44		6.7	6.8	4.5	7	4.3	7.2	4.8	6.7	4.7	5.8	5.1	4.5	4.2	4.1	44
46		6.6	6.6	4.4	6.8	4.2	7	4.6	6.3	4.5	5.5	4.8	4.2	3.9	3.8	46
48		6.5	6.5	4.1	6.6	4	6.8	4.3	6	4.3	5.1	4.5	4	3.7	3.6	48
50		4.6	4.6	4	6.4	3.8	6.2	4.2	5.7	4.1	4.9	4.3	3.7	3.5	3.4	50
52				3.8	5.8	3.6	5.6	3.9	5.4	3.9	4.7	4.1	3.5	3.3	3.3	52
54					5.3	3.5	5.1	3.8	4.9	3.7	4.4	3.9	3.3	3.1	3.1	54
56						3.3	4.6	3.7	4.6	3.6	4.2	3.7	3.2	3	2.9	56
58							4.1	3.6	4.1	3.3	4	3.5	3	2.8	2.7	58
60								3.4	3.7	3.2	3.8	3.3	2.9	2.7	2.6	60
62								3.3	3.3	3.1	3.4	3.2	2.7	2.5	2.4	62
64										2.9	3	3	2.6	2.4	2.3	64
66										2.8	2.7	2.9	2.5	2.3	2.2	66
68												2.6	2.3	2.1	2.1	68
70												2.3	2.2	2	1.9	70
72													2	1.9	1.8	72
74													1.8	1.7	1.7	74
76														1.7	1.4	76

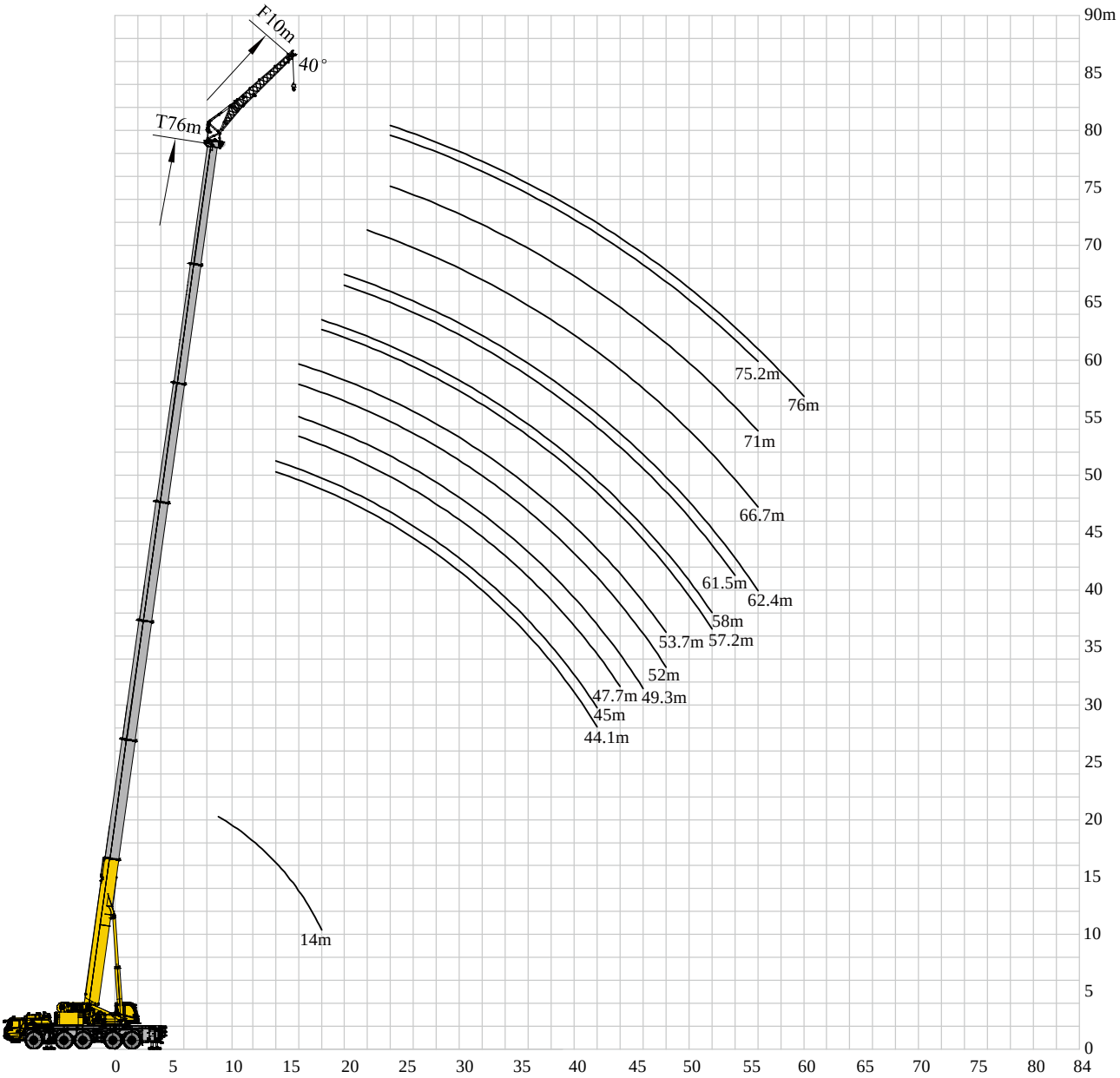
F10m
40°
T76m
75.2m
76m
71m
66.7m
61.5m
62.4m
58m
53.7m
57.2m
52m
47.7m
49.3m
45m
44.1m
14m
90m
85
80
75
70
65
60
55
50
45
40
35
30
25
20
15
10
5
0
0
5
10
15
20
25
30
35
40
45
50
55
60
65
70
75
80
84

LOAD CHARTS

T 14~76M

	14	44.1	45	47.7	49.3	52	53.7	57.2	58	61.5	62.3	66.7	71	75.2	76	
9	8.3															9
10	8															10
12	7.4															12
14	7.1	7.8	7.8													14
16	7	7.6	7.5	7.3	7.6	7.2	7.6									16
18	6.8	7.4	7.4	7.2	7.3	7.1	7.3	7.1	7.3							18
20		7.2	7.2	7	7.2	7	7.1	6.9	7.2	6.8	7					20
22		7.1	7	6.9	7	6.8	7	6.8	7	6.7	6.9	6.8				22
24		6.8	6.9	6.7	6.9	6.7	6.9	6.7	6.9	6.6	6.7	6.7	5.9	5.4	5.2	24
26		6.7	6.7	6.6	6.7	6.6	6.8	6.6	6.8	6.5	6.6	6.6	5.9	5.4	5.2	26
28		6.5	6.5	6.5	6.6	6.5	6.6	6.5	6.5	6.4	6.5	6.5	5.9	5.4	5.2	28
30		6.4	6.4	6.4	6.5	6.4	6.5	6.4	6.4	6.3	6.4	6.4	5.9	5.4	5.2	30
32		6.3	6.3	6.3	6.4	6.2	6.4	6.3	6.3	6.2	6.3	6.3	5.9	5.4	5.2	32
34		6.2	6.2	6.1	6.2	6.1	6.3	6.2	6.2	6.1	6.2	6.2	5.9	5.4	5.2	34
36		6.2	6.1	6	6.1	5.7	6.2	6.1	6.1	6	6.1	6.1	5.9	5.4	5.2	36
38		6.1	6.1	5.8	6.1	5.5	6.1	5.9	6.1	5.9	6	5.9	5.9	5.4	5.2	38
40		6.1	6.1	5.5	6.1	5.3	6.1	5.7	6	5.6	6	5.9	5.6	5	5	40
42		6.1	6.1	5.3	6.1	5	6	5.5	6	5.4	6	5.8	5.4	4.9	4.8	42
44				5.1	6.1	4.8	6	5.2	5.9	5.2	5.9	5.6	5.2	4.5	4.5	44
46					6.1	4.6	6	5.1	5.9	5	5.9	5.3	4.9	4.4	4.4	46
48						4.5	6	4.9	5.9	4.8	5.8	5.1	4.7	4.2	4	48
50								4.7	5.9	4.6	5.6	4.9	4.5	3.9	3.9	50
52								4.5	5.3	4.4	5.4	4.7	4.3	3.8	3.8	52
54										4.3	5.1	4.5	4.2	3.7	3.5	54
56											4.4	4.3	4	3.5	3.4	56
58															3.3	58
60															3.2	60

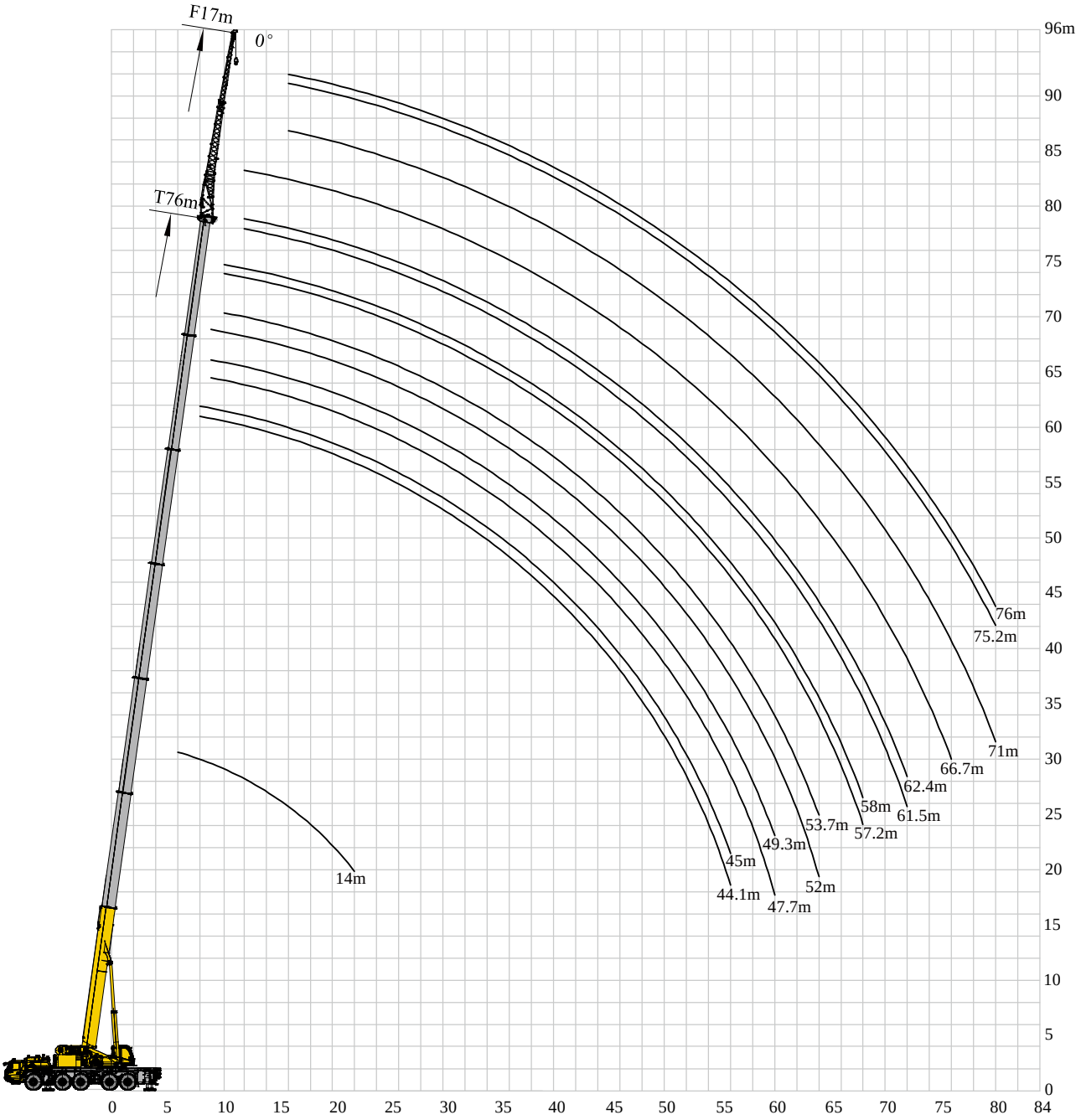
F17m
0°
T76m
96m
90
85
80
75
70
65
60
55
50
45
40
35
30
25
20
15
10
5
0
0
5
10
15
20
25
30
35
40
45
50
55
60
65
70
75
80
84
76m
75.2m
71m
66.7m
62.4m
61.5m
58m
57.2m
53.7m
52m
49.3m
47.7m
45m
44.1m
14m

LOAD CHARTS

T 14~76M

	14	44.1	45	47.7	49.3	52	53.7	57.2	58	61.5	62.3	66.7	71	75.2	76	
6	7.8															6
7	7.2															7
8	6.7	8.3	8													8
9	6.2	8	7.7	7.1	7.5	6.2										9
10	5.8	7.7	7.4	6.8	7.3	6.1	7	6	5.8							10
12	5.2	7.1	6.9	6.3	6.9	6	6.8	5.8	5.8	4.8	5.4	4.9				12
14	4.6	6.5	6.4	6	6.4	5.8	6.4	5.6	5.8	4.8	5.3	4.8				14
16	4.2	6	5.9	5.5	6.1	5.5	6	5.4	5.8	4.8	5.2	4.7	4.3	3.8	3.7	16
18	3.8	5.6	5.6	5.3	5.6	5.2	5.7	5.2	5.6	4.7	5	4.7	4.2	3.8	3.6	18
20	3.5	5.3	5.3	5	5.2	4.9	5.3	4.9	5.3	4.5	4.7	4.6	4.1	3.8	3.6	20
22	3.2	4.9	4.9	4.7	4.9	4.6	5	4.7	5	4.3	4.6	4.5	4.1	3.7	3.6	22
24		4.6	4.6	4.4	4.7	4.5	4.7	4.5	4.7	4.1	4.4	4.2	4.1	3.7	3.6	24
26		4.4	4.3	4.3	4.4	4.3	4.5	4.2	4.6	4	4.2	4.1	4	3.7	3.6	26
28		4.1	4	4	4.2	4.1	4.4	4.1	4.3	3.8	4	3.9	3.7	3.7	3.6	28
30		4	3.9	3.8	4	3.9	4.1	3.9	4.2	3.7	3.8	3.8	3.6	3.6	3.5	30
32		3.7	3.7	3.6	3.8	3.7	4	3.8	4	3.5	3.7	3.7	3.5	3.4	3.4	32
34		3.5	3.6	3.5	3.7	3.6	3.8	3.6	3.9	3.4	3.5	3.6	3.5	3.4	3.4	34
36		3.4	3.4	3.4	3.5	3.4	3.7	3.5	3.7	3.3	3.4	3.4	3.4	3.3	3.3	36
38		3.2	3.3	3.2	3.3	3.3	3.6	3.4	3.6	3.2	3.3	3.3	3.3	3.2	3.2	38
40		3.1	3.2	3.1	3.2	3.2	3.3	3.3	3.4	3	3.2	3.2	3.2	3.1	3.1	40
42		3	3.1	3	3.1	3.1	3.2	3.2	3.3	2.9	3	3.1	3.1	3	3	42
44		2.9	2.9	2.9	3	3	3.1	3.1	3.2	2.8	2.9	3	3	2.9	2.9	44
46		2.8	2.8	2.8	2.9	2.9	3	3	3.1	2.7	2.8	2.9	2.9	2.8	2.8	46
48		2.7	2.7	2.6	2.8	2.8	2.9	2.9	3	2.6	2.7	2.8	2.8	2.7	2.7	48
50		2.6	2.6	2.5	2.6	2.7	2.8	2.8	2.9	2.5	2.6	2.7	2.7	2.6	2.6	50
52		2.4	2.5	2.5	2.5	2.6	2.7	2.7	2.8	2.5	2.5	2.6	2.6	2.6	2.5	52
54		2.4	2.4	2.4	2.5	2.4	2.6	2.6	2.7	2.4	2.4	2.5	2.5	2.5	2.5	54
56		2.3	2.3	2.4	2.4	2.4	2.5	2.5	2.6	2.3	2.4	2.4	2.4	2.4	2.3	56
58				2.4	2.4	2.4	2.4	2.5	2.5	2.3	2.3	2.4	2.4	2.3	2.1	58
60				2.2	2.3	2.3	2.4	2.4	2.5	2.3	2.2	2.3	2.3	2.1	2	60
62						2.3	2.3	2.4	2.3	2.2	2.2	2.3	2.3	2	1.9	62
64						2.2	2.3	2.3	2.3	2.1	2.2	2.2	2.2	1.8	1.8	64
66								2.3	2.3	2.1	2.1	2.2	2.1	1.7	1.7	66
68								2.2	2.3	2	2.1	2.1	2	1.6	1.6	68
70										1.9	2.1	2	1.8	1.5	1.5	70
72										1.8	2	1.9	1.7	1.4	1.3	72
74												1.8	1.6	1.3	1.2	74
76												1.7	1.5	1.2	1.1	76
78													1.4	1.1	1.1	78
80													1.4	1.1	1	80

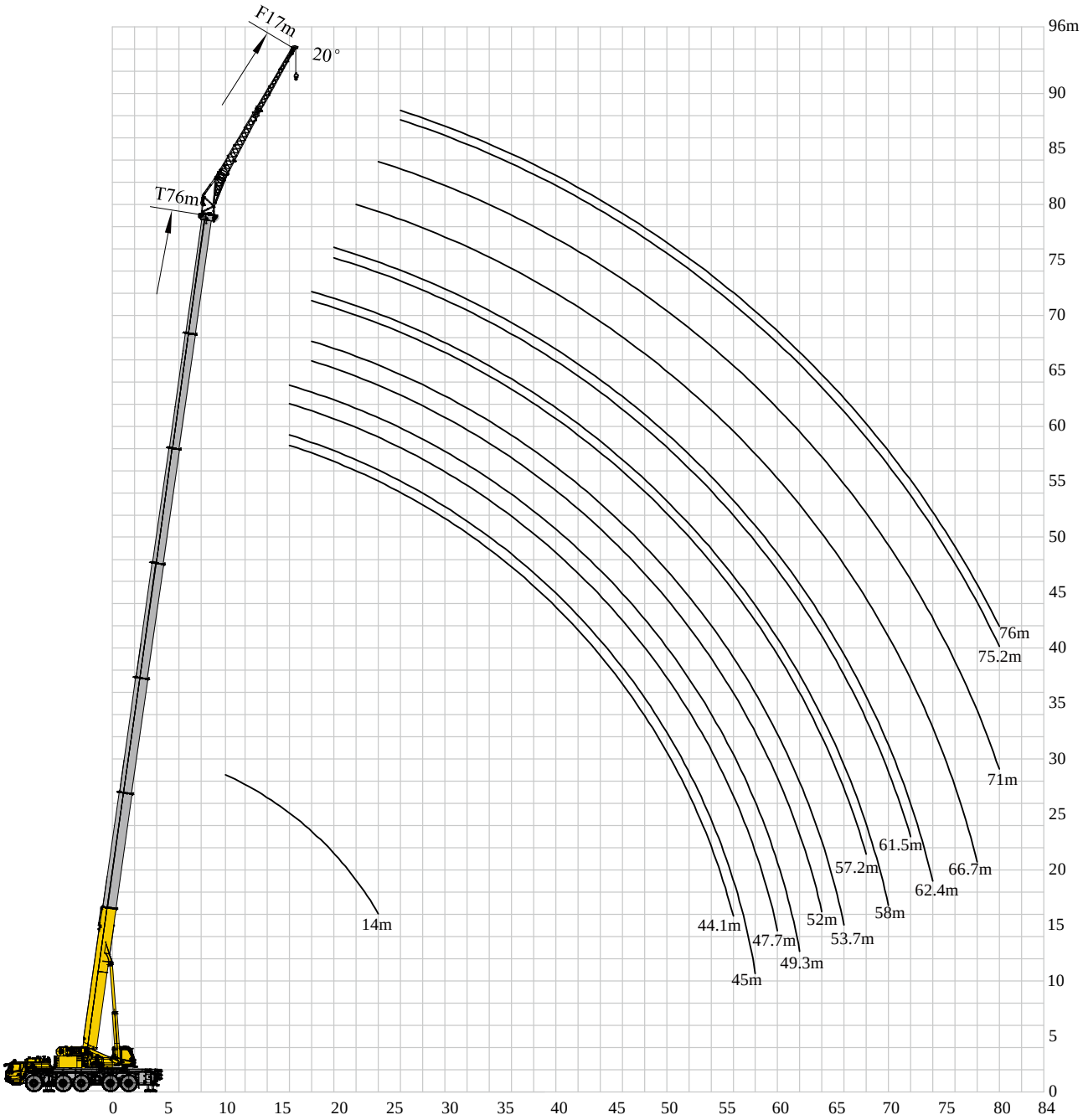
F17m
20°
T76m
96m
90
85
80
75
70
65
60
55
50
45
40
35
30
25
20
15
10
5
0
0
5
10
15
20
25
30
35
40
45
50
55
60
65
70
75
80
84
76m
75.2m
71m
66.7m
62.4m
61.5m
58m
57.2m
53.7m
52m
49.3m
47.7m
45m
44.1m
14m

LOAD CHARTS

T 14~76M

	14	44.1	45	47.7	49.3	52	53.7	57.2	58	61.5	62.3	66.7	71	75.2	76	
10	4.5															10
12	4															12
14	3.7															14
16	3.3	4.1	4.1	3.9	4.1											16
18	3.2	3.8	3.8	3.8	4	3.8	3.9	3.8	3.8							18
20	3	3.7	3.7	3.7	3.7	3.7	3.8	3.6	3.7	3.6	3.6					20
22	2.8	3.6	3.6	3.5	3.6	3.5	3.7	3.5	3.6	3.5	3.5	3.5				22
24	2.7	3.5	3.5	3.3	3.5	3.4	3.5	3.4	3.5	3.4	3.4	3.4	3.3			24
26		3.4	3.4	3.2	3.4	3.3	3.4	3.3	3.4	3.3	3.3	3.3	3.2	3.1	3.1	26
28		3.3	3.3	3.1	3.3	3.2	3.3	3.2	3.3	3.2	3.2	3.2	3.2	3.1	3.1	28
30		3.2	3.2	3	3.2	3.1	3.2	3.1	3.2	3.1	3.1	3.1	3.1	3	3	30
32		3.1	3	2.9	3.1	2.9	3.1	3	3	3	3.1	3	3	2.9	2.9	32
34		3	2.9	2.8	3	2.8	3	2.9	2.9	2.9	3	2.9	2.9	2.8	2.8	34
36		2.8	2.8	2.8	2.9	2.7	2.9	2.8	2.8	2.8	2.9	2.8	2.9	2.8	2.8	36
38		2.7	2.7	2.7	2.7	2.7	2.8	2.8	2.8	2.8	2.8	2.8	2.8	2.8	2.8	38
40		2.6	2.6	2.6	2.7	2.7	2.7	2.7	2.8	2.7	2.8	2.8	2.7	2.8	2.7	40
42		2.6	2.6	2.6	2.6	2.6	2.7	2.7	2.7	2.6	2.7	2.7	2.7	2.7	2.7	42
44		2.5	2.6	2.6	2.6	2.5	2.6	2.7	2.6	2.6	2.7	2.6	2.7	2.6	2.6	44
46		2.5	2.5	2.5	2.5	2.5	2.6	2.5	2.6	2.6	2.6	2.6	2.6	2.6	2.6	46
48		2.5	2.5	2.4	2.5	2.5	2.5	2.5	2.5	2.5	2.6	2.6	2.6	2.6	2.5	48
50		2.4	2.4	2.4	2.5	2.4	2.5	2.4	2.5	2.5	2.5	2.5	2.5	2.5	2.5	50
52		2.4	2.4	2.4	2.4	2.4	2.4	2.4	2.5	2.5	2.5	2.5	2.5	2.5	2.4	52
54		2.4	2.4	2.4	2.4	2.4	2.4	2.4	2.4	2.4	2.4	2.5	2.5	2.5	2.4	54
56		2.4	2.4	2.4	2.4	2.4	2.4	2.4	2.4	2.4	2.4	2.4	2.4	2.4	2.4	56
58			2.4	2.4	2.4	2.3	2.4	2.3	2.4	2.3	2.4	2.4	2.4	2.4	2.3	58
60				2.4	2.4	2.3	2.3	2.3	2.4	2.3	2.4	2.4	2.4	2.4	2.3	60
62					2.4	2.3	2.3	2.3	2.3	2.3	2.3	2.3	2.4	2.4	2.3	62
64						2.3	2.3	2.3	2.3	2.3	2.3	2.3	2.3	2.3	2.2	64
66							2.3	2.3	2.3	2.3	2.3	2.3	2.3	2.2	2.1	66
68								2.3	2.3	2.3	2.3	2.3	2.3	2.1	1.9	68
70									2.3	2.3	2.3	2.3	2.3	1.9	1.8	70
72										2.3	2.3	2.3	2.2	1.8	1.8	72
74											1.9	2.3	2	1.7	1.7	74
76												2.1	2	1.6	1.5	76
78												1.6	1.9	1.5	1.5	78
80													1.6	1.5	1.2	80

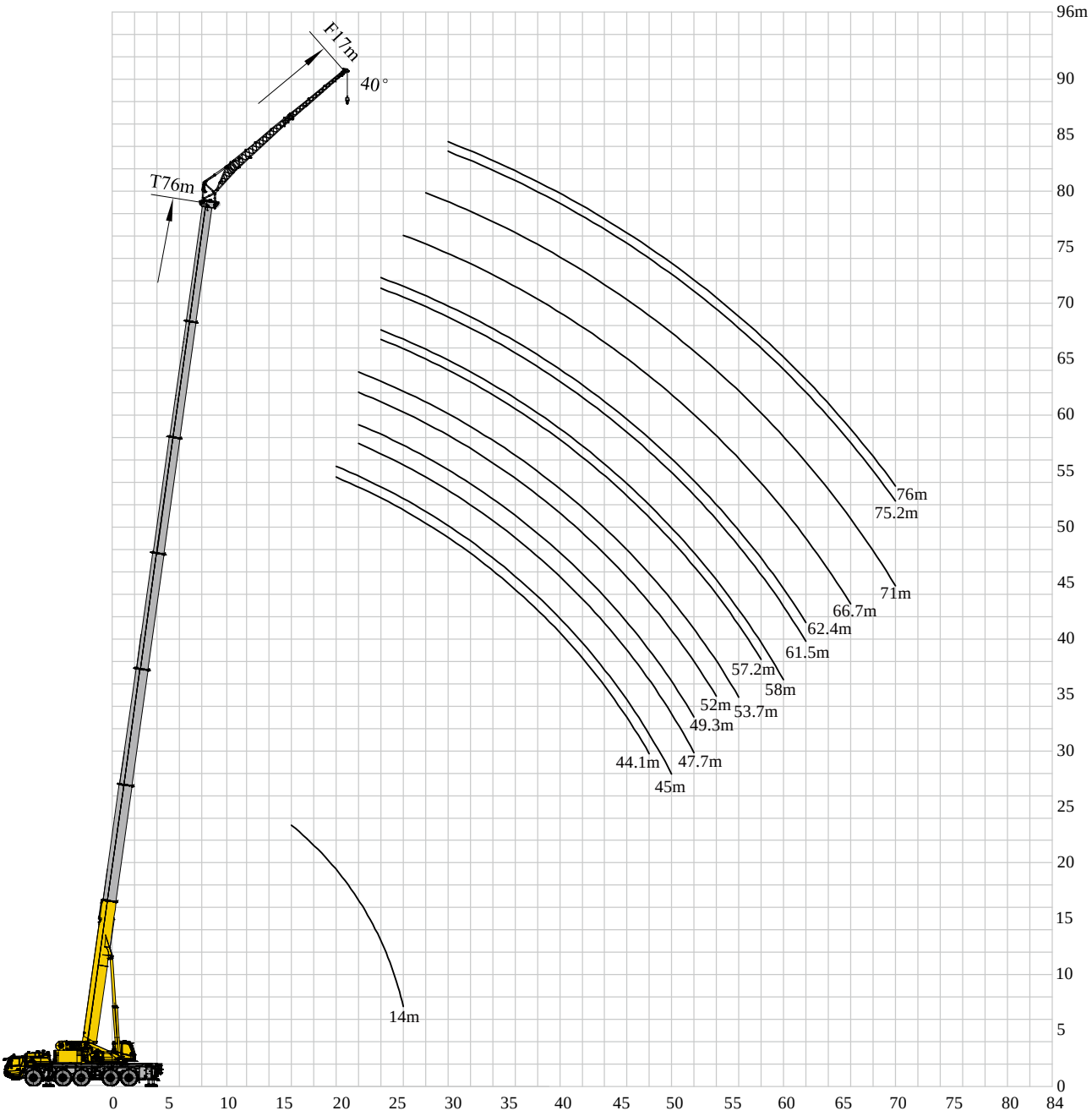
F17m
40°
T76m
96m
90
85
80
75
70
65
60
55
50
45
40
35
30
25
20
15
10
5
0
0
5
10
15
20
25
30
35
40
45
50
55
60
65
70
75
80
84
76m
75.2m
71m
66.7m
62.4m
61.5m
57.2m
58m
52m
53.7m
49.3m
44.1m
47.7m
45m
14m

LOAD CHARTS

T 14~76M

	14	44.1	45	47.7	49.3	52	53.7	57.2	58	61.5	62.3	66.7	71	75.2	76	
16	2.8															16
18	2.6															18
20	2.5	2.7	2.7													20
22	2.4	2.6	2.6	2.6	2.6	2.5	2.6									22
24	2.4	2.6	2.5	2.5	2.5	2.5	2.6	2.5	2.5	2.6	2.5					24
26	2.4	2.5	2.5	2.5	2.5	2.5	2.5	2.5	2.5	2.4	2.5	2.5				26
28		2.5	2.5	2.4	2.5	2.4	2.5	2.4	2.5	2.3	2.4	2.4	2.4			28
30		2.4	2.4	2.4	2.4	2.4	2.4	2.3	2.4	2.3	2.4	2.4	2.4	2.2	2.2	30
32		2.4	2.4	2.4	2.3	2.4	2.4	2.3	2.3	2.3	2.4	2.4	2.3	2.2	2.2	32
34		2.4	2.4	2.3	2.3	2.3	2.4	2.2	2.3	2.3	2.3	2.3	2.3	2.2	2.2	34
36		2.3	2.3	2.3	2.2	2.3	2.3	2.2	2.3	2.3	2.2	2.3	2.3	2.2	2.2	36
38		2.3	2.3	2.3	2.2	2.3	2.3	2.2	2.3	2.3	2.2	2.3	2.2	2.2	2.2	38
40		2.3	2.3	2.2	2.2	2.2	2.3	2.2	2.2	2.2	2.2	2.2	2.2	2.2	2.2	40
42		2.3	2.3	2.2	2.2	2.2	2.2	2.1	2.2	2.2	2.1	2.2	2.1	2.2	2.2	42
44		2.3	2.3	2.2	2.2	2.2	2.2	2.1	2.2	2.2	2.1	2.2	2.1	2.1	2.1	44
46		2.3	2.3	2.2	2.2	2.2	2.2	2.1	2.2	2.2	2.1	2.2	2.1	2.1	2.1	46
48		2.3	2.3	2.2	2.2	2.2	2.2	2.1	2.2	2.2	2.1	2.2	2.1	2.1	2.1	48
50			2.3	2.2	2.2	2.2	2.2	2.1	2.2	2.2	2.1	2.2	2.1	2.1	2.1	50
52				2.2	2.2	2.2	2.1	2.1	2.2	2.2	2.1	2.2	2.1	2.1	2.1	52
54						2.2	2.1	2.1	2.2	2.2	2.1	2.2	2.1	2	2	54
56							2.1	2.1	2.2	2.2	2.1	2.2	2.1	2	2	56
58								2.1	2.2	2.2	2.1	2.2	2.1	2	2	58
60									2.2	2.1	2.1	2.2	2.1	2	2	60
62										2.1	2.1	2.2	2.1	2	2	62
64												2.2	2.1	2	2	64
66												2.2	2.1	2	2	66
68													2.1	2	2	68
70													2.1	2	2	70

Type	Item		Unit	Parameters
Dimensions	Dimensions (L×W×H)		mm	16235×3000×4000
	Axle spacing		mm	2630+1650+2610+1650
	Track (front/rear)		mm	2529
	Front overhang / rear overhang		mm	2568/2992
	Front extension / rear extension		mm	2135/0
Weight	Maximum permissible total weight		kg	60000
	Axle load	Axle 1	kg	12000
		Axle 2	kg	12000
		Axle 3	kg	12000
		Axle 4	kg	12000
		Axle 5	kg	12000
Power	Engine model		——	OM471LA.E5-1
	Maximum net power / RPM		kW/(r/min)	390/1600
	Maximum output torque / RPM		N.m/(r/min)	2600/1300
Travel	Maximum travel speed		km/h	80
	Minimum stable travel speed		km/h	3
	Minimum turning diameter		m	19
	Minimum ground clearance		mm	357
	Approach angle		°	18
	Departure angle		°	10
	Braking distance (initial speed at 30 km/h)		m	≤10
	Maximum grade ability		%	60
	Fuel consumption per 100 km		L	70

TABLE OF MAIN TECHNICAL PARAMETERS

Type	Item			Unit	Parameters
Main performance	Maximum rated lifting capacity			t	250
	Minimum rated working radius			m	2.5
	Turning radius at turntable tail	At the counterweight		mm	5225
		At auxiliary winch		mm	5085
	Maximum load moment	Base boom		kN.m	6769
		Fully-extended boom		kN.m	2713
		Fully-extended boom + jib		kN.m	——
	Outrigger span	Longitudinal		m	9.19
		Lateral (fully extended / 75% extended / half extended / 25% extended)		m	7.9/6.6/5.3/4
	Lifting height	Base boom		m	14.5
		Fully-extended boom		m	75.5
		Fully-extended boom + jib		m	114.5
	Boom length	Base boom		m	14
		Fully-extended boom		m	76
		Fully-extended boom + jib		m	116
Parameters of working speed	Time for raising boom			s	≤60
	Time for fully extending the boom			s	≤650
	Maximum slewing speed			r/min	1.3
	Time for extending and retracting outriggers	Outrigger beams	Retracting	s	≤40
			Extending	s	≤40
		Outrigger jacks	Retracting	s	≤60
			Extending	s	≤90
	Lifting speed (Single line, 5th layer, no load)	Main winch system		m/min	≥130

	Superstructure
Max	Rated lifting load
	Counterweight
	Slewing radius of variable-position counterweight
	Hook block
	Parts of line
%	Jib length combinations
	Wind speed
	Configuration
	Optional equipment
	Rope length
Φ	Wire rope diameter

T	Boom
	Boom length
	Boom working radius
	Lifting height with boom
	Boom angle
V	Extension
I	Independent jib head
	Simple jib head
F	Fixed jib
	Fixed jib length
	Fixed jib offset angle
N	Luffing jib

DESCRIPTION OF SYMBOLS

F	Breaking load of rope
Max	Max. working speed
1	Main winch
2	Auxiliary winch
	Chassis
	Outrigger span
	Tire
	Axle load
%	Grade ability
	Travel speed
	Luffing

	Max. lifting height
	Max. working radius
Y	Super lift
W	Wind power jib
	Telescoping
	Slewing
360°	360° operation of the boom
360° 5	With the 5th jack down, 360° operation of the boom
	Side and rear slewing
0°	Boom over front or over rear
13000 EN	Standard

INTELLIGENT QUALITY MANUFACTURING

- Driven by digital models, we have implemented leading intelligent quality manufacturing technologies, integrating process simulation and simulation technology, creating a high-end manufacturing platform that combines manufacturing and process.

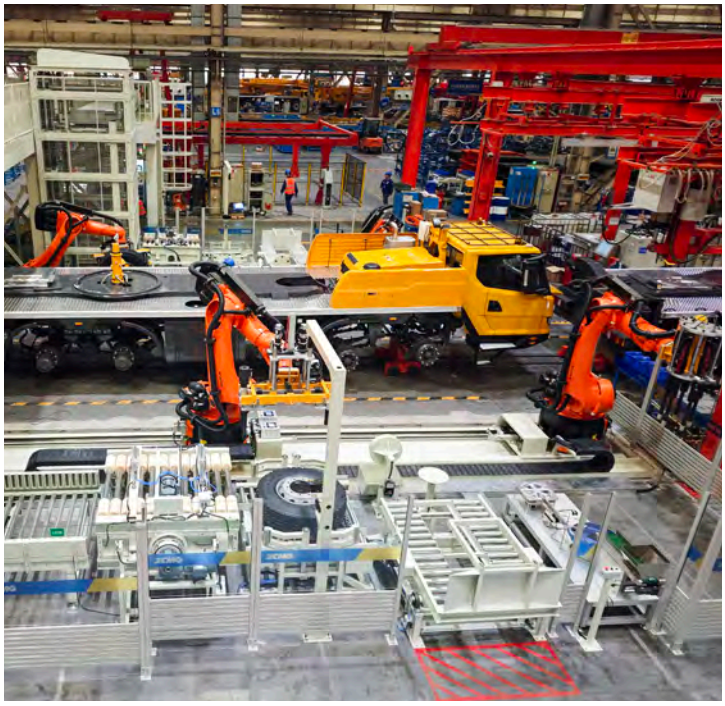

INTELLIGENT ASSEMBLING

SPRAYING PROCESS OF ROBOTS

DIGITIZED CORE COMPONENTS WORKSHOP

UNMANNED AUTOMATIC WELDING

DIGITIZED STRUCTURE WORKSHOP

SAFE AND RELIABLE

G-SAFE LIFE CYCLE SAFE QUALITY

PARTS AND COMPLETE MACHINE TESTING

- Each technology and component is restructured to meet the most stringent quality inspection standards.
- Each complete machine undergoes rigorous testing and a large number of experiments to ensure reliable operation in various complex environments.

OVER 2,000 COMPONENTS OF 123 KINDS UNDER 5 CATEGORIES

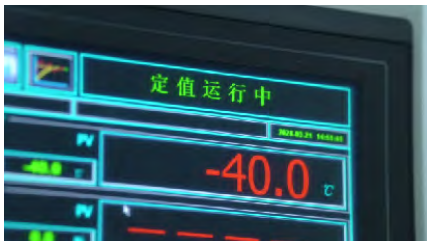

HMI display
Low-temperature performance test under -40℃

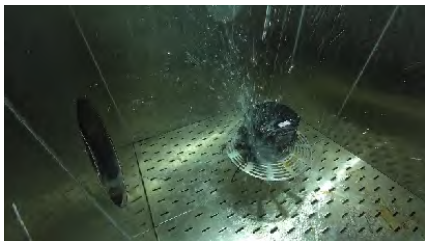

Length measurement sensor
48-hour rain-proof test

Panel buttons
1.2 million times reliability test

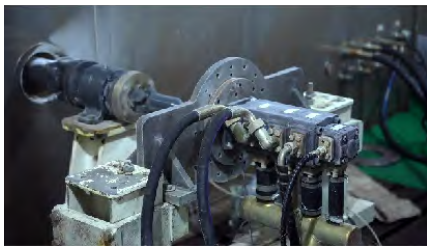

Hydraulic oil pump
Low-temperature performance test under -40℃

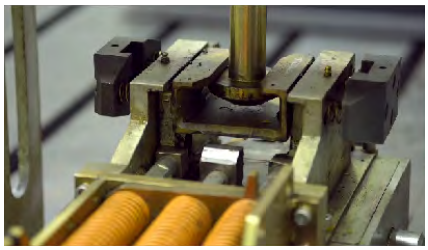

Telescoping mechanism
Smoothness test

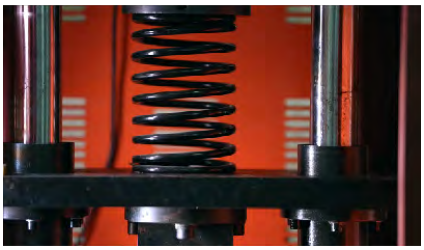

Telescoping mechanism
Smoothness test

178 FULL-SCALE LIMIT TESTS ON THE COMPLETE MACHINE

Passability

Climbing & Hill holding

Dynamic & Static lifting

NOTES

- The document is intended as reference only. It is only a guide and should not be used to operate the crane. See product manuals for correct operation instructions.
- The load capacity values in the tables are stated in t, which are the maximum total load capacity of the crane on a stable and even surface under the current boom length and radius, including the weight of hooks and riggings. The weight of the above devices must be subtracted during lifting operations.
- The working radius is the horizontal gravity center distance of the load from the rotational axis of the crane superstructure measured at the ground.
- Observe the boom angle limit. Never operate the crane with the boom angle beyond the recommended limit even if a load is not being carried.
- A lifting operation is permissible only when the wind force is below grade 5 (instantaneous wind speed of 14.1 m/s, wind pressure of 125 N/m^2).

XUZHOU CONSTRUCTION MACHINERY GROUP IMP. & EXP. CO., LTD

Address: No.1, Tuolanshan Road,
Xuzhou Economic Developing Zone, jiangsu, China 221004
Tel: + 86(0)516 8773 9703
Fax:+ 86(0) 516 8773 9230
E-Mail: europe@xcmg.com

XCMG CRANE XCMGCRANE.OFFICIAL

This document is non-contractual. Constant improvement and engineering progress make it necessary that we reserve the right to make product model.specification and configuration changes without notice. Illustrations shown may include optional equipment and accessories and may not include all standard equipment. Some parts need to be purchased separately. Conform to the local laws for license application and road traveling.