LW900KN WHEEL LOADER

Description	Specification	Unit
Rated opreating load	9000	kg
Bucket capacity	5	m³
Operating weight	31000	kg
Maximum breakout force	260	kN
Maximum traction force	245	kN
Lifting time of boom	≤6.5	s
Total cycle time	≤11.5	s
Minimum turning radius (at tire center)	6200	mm
Articulation angle	±38	°
Gradeability	25	°
Tire size	29.5R25	
Engine model	CUMMINS QSM11—C335	
Rated Power/speed	250/2100	kW/rpm
Traveling speed Ⅰ-gear(F/R)	7/7	km/h
Traveling speed Ⅱ-gear(F/R)	11.6/11.6	km/h
Traveling speed Ⅲ-gear(F/R)	24.5/24.5	km/h
Traveling speed Ⅳ-gear(F/R)	35	km/h

Structure and specification are subject to change without notice.In case there is any difference between the description of the machine and the substantial machine,the substantial machine should govern.

OUTLINE DIMENSIONS

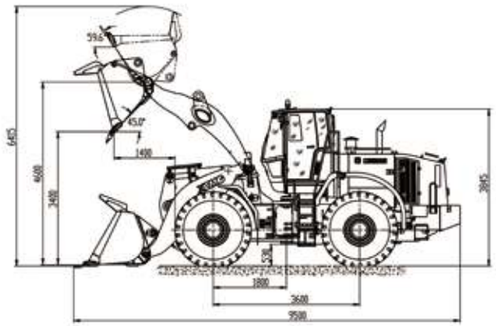

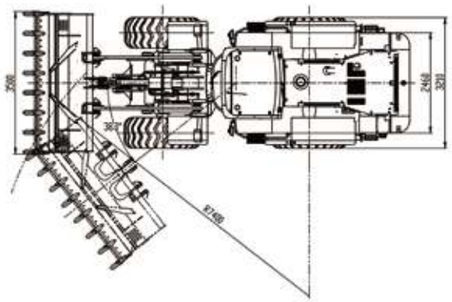

MAIN SPECIFICATIONS

Description	Specification	Unit
Rated opreating load	9000	kg
Bucket capacity	5	m³
Operating weight	31000	kg
Maximum breakout force	260	kN
Maximum traction force	245	kN
Lifting time of boom	≤6.5	s
Total cycle time	≤11.5	s
Minimum turning radius (at tire center)	6200	mm
Articulation angle	±38	°
Gradeability	25	°
Tire size	29.5R25	
Engine model	CUMMINS QSM11—C335	
Rated Power/speed	250/2100	kW/rpm
Traveling speed Ⅰ-gear(F/R)	7/7	km/h
Traveling speed Ⅱ-gear(F/R)	11.6/11.6	km/h
Traveling speed Ⅲ-gear(F/R)	24.5/24.5	km/h
Traveling speed Ⅳ-gear(F/R)	35	km/h

Description	Specification
Rated bucket capacity	5m³
Rated loading capacity	9000kg
Rated power	250kW
Gross weight	31000kg
Dumping height	3400mm
Maximum breakout force	260kN

XCMG FOR YOUR SUCCESS

XCMG Construction Machinery Co., Ltd.

Address: NO.99 North Kunpeng Road, Xuzhou Economic Development Zone, jiangsu, China 221004
Tel: +86-51687560288 **FAX:** +86-51683111363 **E-mail:** sales@xcmg.com **Website:** http://www.xcmg.com

20170330

LW900KN WHEEL LOADER

Heavy-duty, high reliability, and energy-conservation

Product Overview

- LW900KN wheel loader is the latest generation product of world's advanced level built with all efforts by XCMG with the globalized R&D platform. Featuring strong power, high firmness and reliability, high energy-conservation and efficiency, high driving/riding comfort, and high operation safety, it's the first-choice production equipment for ports, logistics, and large mines.

Model Characteristics

- The latest integrated FOPS & ROPS ultra-low-noise cab features European/American mainstream style and super-large space and integrates the world's most advanced technologies nowadays to reach the world-class level and realize higher safety, broader visual field, and better operating comfort.
- The scientifically matched and in-depth optimized drive system and the transmission and drive axle of international advanced quality achieve higher efficiency and reliability.
- The extended wheelbase heavy-load design and the structural parts analyzed and optimized by 3D simulation meet the operation needs under severe working conditions.
- The load-sensing variable technology is applied to supply the oil pressure and flow depending on the working needs, which greatly improves the utilization efficiency of fuel.
- The independent single-row radiator system with large fin spacing is applied to thoroughly solve the thermal balance difficult during operations under diversified severe environments.

Performance advantages

- With ≥260kN breakout force and ≤ 6.5s lifting time, this product features stronger and more efficient operations.
- With optional 4.0~7.0m3 bucket depending on different materials and working conditions, this product features stronger working condition adaptability and up to 3.9m dumping height.

The warranty period for the front and rear frames, boom, and arm is 2 years or 5,000 hours (whichever comes first), which is far beyond the loader industry warranty level to manifest the top quality of XCMG loaders.

Heavy-duty design ensures high firmness and reliability

Mightiness is the style of XCMG and heavy-duty is the characteristic of XCMG. By utilizing the international advanced design means (such as 3D simulation), XCMG builds the industry's most mighty machine structure, deeply researches the customer needs, and applies the globalized product R&D platform to guarantee the high attendance rate of the products.

■ Firm frame

- Through the finite element analysis and optimization, the front and rear frames feature reasonable layout, high stiffness, and strong overload resistance and are resistant to the torsions and impacts under various working conditions.
- The double-row tapered roller bearings are applied for the upper and lower hinge pins between front and rear frames to effectively diffuse the impacts from all directions, featuring higher carrying capacity and better stability and reliability.

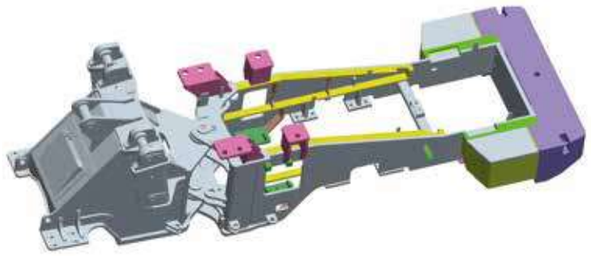

■ Efficient and firm working device

- The working device is thoroughly made of high strength sheet materials and optimally designed. The bucket is made of high strength wear-resistant material to improve the wear resistance and impact resistance by >30%. The shape optimized bucket forms a best matching with the working device to realize super-strong pile penetrating force, higher breakout force, and faster motion speed.
- The advanced electromagnetic positioning technology is applied to automatically level the bucket, which simplifies the operation procedures and improves the working efficiency. The boom lifting limit prevents the mechanical impact during lifting to minimize the damages.

■ Maintenance-free high reliability brake system

- The full-enclosed wet brake system is applied to eliminate the blockage by dusts and impurities and the damage of brake pads, featuring less wear and maintenance-free.
- Two independent hydraulic circuits isolate from each other to guarantee the safety of brake system.

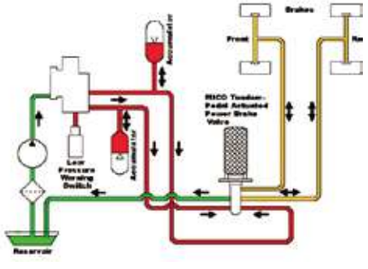

■ Design of high strength drive axle

- XCMG made special improvements for the internationally universal high tonnage drive axle structure to realize more sufficient lubrication and cooling for the axle bodies and longer lives of the drive axles.

■ Special protection and structure design

- The electrostatic powder coating technology is comprehensively applied for the machine and the protection measure is taken for all electric connectors and critical hydraulic pipelines to form effective anti-corrosion capacity.
- Optimized lubricating oil-ways: Without the drilling of holes on hinge pins, the strength and service life of the connecting hinge pins between boom and bucket are increased by more than one time to lead the industry level.
- The three-stage intake filter for the engine and the additionally installed high flow ventilator for the hydraulic oil tank ensure the reliability of all systems under severe working environments.

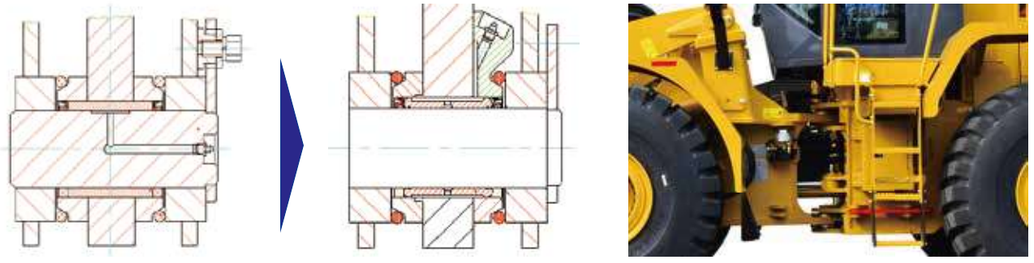

■ International quality hydraulic and electric units

- The international brand energy-saving, high efficiency, and low noise hydraulic pump equipped provides stronger hydraulic power.
- The high-precision cold-drawn steel tubes are applied for all hydraulic pipes to realize better butt welding performance and reliability.
- The pilot control system features international quality, the harnesses adopt full-sealed connectors, and all electric units are treated with dustproof and waterproof technology to ensure high reliability.

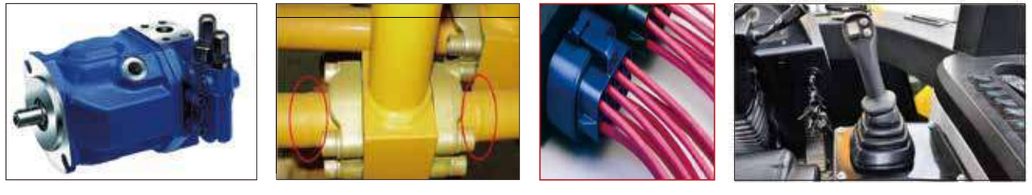

High·efficiency and energy-conservation

The XCMG's exclusive power system matching technology ensures the best power performance. The optimized bucket shape remarkably improves the bucket fullness rate. With powerful digging performance and rapid motions, the bucket can complete the maximum working load within the shortest time.

LW900KN is applied with the industry's most advanced energy-conservation technologies, including lightweight design, intelligent independent radiator, fully variable hydraulic system, so that the combined energy-conservation effect from these technologies is higher than 15%.

■ Scientifically matched and in-depth optimized drive system

- The international leading full-automatic electronic control transmission is equipped, with four forward and three reverse gears and switchover function between automatic and manual modes. The automatic shift technology based on intelligent control defines the reasonable gearshift strategy as per the principle of optimal drive efficiency to simplify the operations and save the energy.

- The full-hydraulic wet brake axle features high carrying capacity and compact structure. The front axle is fitted with differential lock function, featuring high field adaptability.

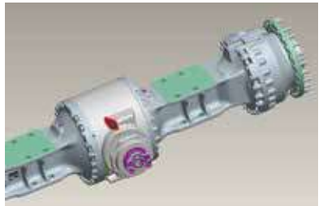

■ Low emission and low fuel consumption engine

- TIER-3 compliant Cummins engine
- The low noise and high torque engine and the high capacity torque converter guarantee the maximum efficiency during low speed traveling to remarkably reduce the fuel consumption.

■ Enlarged bucket capacity

- The high performance bucket is installed to increase the fullness coefficient, guarantee the maximum material loading volume, improve the productivity, and reduce the fuel consumption.
- Bucket capacity: 4.0/7.0 m3
- Rated bucket capacity: 5.0m3

■ Extended wheelbase/38º articulated angle

- Extended wheelbase and wide wheel tread ensure high longitudinal and lateral stability.
- The 38º articulated angle guarantees powerful field adaptability.

Wheel tread	2460mm
Wheelbase	3600mm
Minimum turning radius	6200mm

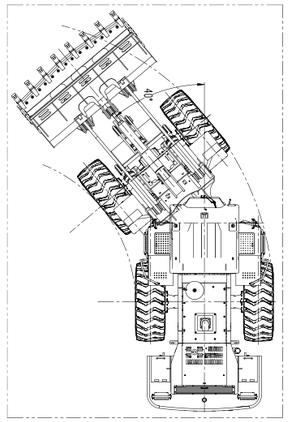

■ Energy-conservation and high-efficiency hydraulic system

- The load-sensing variable technology is applied to supply the oil pressure and flow depending on the working needs, which prevents the high pressure overflow loss and reduces the fuel consumption by 10%.
- The double-pump confluence system, the hydraulic flow amplifying steering, and the single-joystick pilot control are applied to realize high efficiency and flexibility.
- The pressure unloading technology is applied to realize automatic unloading, reduce the overflow loss, and remarkably improve traction force under composite working conditions.
- With total cycle time at 11.5s, the hydraulic system features high working efficiency.

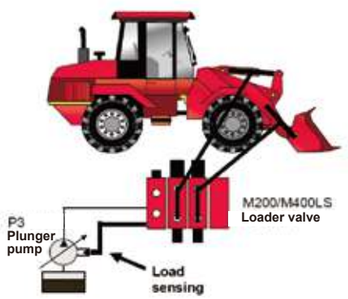

■ Intelligent independent heat dissipation system

- The motor and fan speeds are intelligently adjusted based on the actual temperature to maintain the working temperature at the most appropriate temperature, improve the fuel efficiency, and save the energy by 5% for the machine.

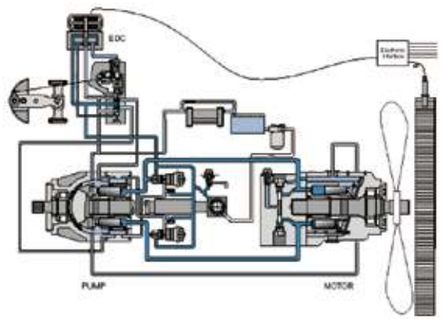

Human-Oriented and High Comfort and Safety

The latest integrated FOPS & ROPS ultra-low-noise cab features European/American mainstream style and super-large space and integrates the world's most advanced technologies nowadays to reach the world-class level and realize higher safety, broader visual field, and better operating comfort.

■ Best operating environment

- The cab with super-large space and good sealing performance is fitted with full-coverage exquisite interior trim parts and the damping and noise reduction measures for the cab and engine hood realize ≤78dB(A) operator's parotic noise to build a comfortable operating environment.
- The air cushioned composite control seat equipped is easily adjustable in vertical and longitudinal directions to realize comfortable operations.
- The freely adjustable steering column and the ergonomically arranged control units and buttons are easily accessible to achieve excellent operability.
- The pilot joystick incorporates the FNR function to realize the single-joystick control on the operations of the machine, featuring easier and faster operations.

- The silicone oil shock absorbers are adopted to connect the cab with the frame to realize the flexible vibration transmission and remarkably reduce the jitter within the cab.
- All-new digitalized combination instrument features high elegance and visualization degree.
- Standard MP3 player, AM/FM radio, and luxury loudspeaker system.
- The high power heating and air conditioning system with intelligent temperature control and the pressurized cab provide you with a super-quiet and dust-free comfortable operating environment with appropriate temperature.

- The double-pedal brake with application of composite brake technology features high elegance. The adjustable clutch changes along with the change of pedal angle and the torque inputted from the transmission to the drive axle to minimize the impact and generated heat during braking and improve the comfort and realize energy-conservation and consumption reduction.

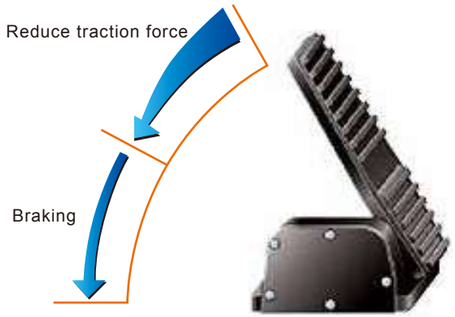

■ High safety and comfort

- The integral structure and built-in skeleton of the cab protect the cab against rollover and falling objects.
- The large-arc hyperboloid glasses achieve broad visual field.
- The reversing monitoring system is equipped to reduce the rearview blind zones and improve the working safety.

Convenient Maintenances

XCMG takes the user's convenient maintenances as the important design concept. All maintenance points are easily accessible to improve the safety, shorten the maintenance time, and ease the daily maintenances.

■ New skeleton structure engine hood

- The new skeleton structure engine hood and the large side gates boast large opening angle and make the checking, repair, and maintenance easier for the engine and radiator.
- The engine oil filter, fuel filter, and transmission filter are easily accessible to achieve convenient maintenances.

■ Radiator with large fin spacing

- The radiator adopts the single row parallel structure with large fin spacing to realize good heat dissipation performance, easy cleaning, and high blockage resistance and perfectly adapt to diversified heavily dusty working conditions.
- The fan incorporates the reverse rotation function to ease the cleaning of radiator.

■ entral lubrication

- The lubricating grease is pumped automatically to all lubricating points periodically and quantitatively to ensure the normal and lasting running of various friction points.
- Pressure measurement device: The pressure measurement ports for hydraulic system and transmission system are concentrated to ease the checking and maintenance of the system.
- The central fuse case: The running status of electric system is centrally indicated to ease the maintenances.
- The powder sintered dustproof ventilator: It features high firmness and reliability and easy maintenances.
- The independent chamber design for oil return line of hydraulic oil tank: It guarantees the convenient maintenances.

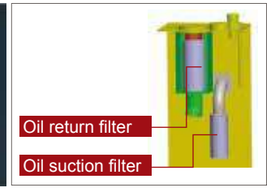

■ GPS system

- Through the GPS terminal system, the operation and maintenance situations of the machine can be timely and accurately understood and the construction status of the machine and the running data of the engine can be mastered.

■ Electronic monitoring and sound-light alarm

- The high reliability multi-functional combination instrument equipped accurately monitors the running status of the engine and accurately reads the malfunctions of engine and transmission via CAN bus communication technology. With sound-light alarm and indication, the LCD screen accurately displays the running status of the whole machine.

Customer support

- To guarantee the users' trouble-free use of products, XCMG launched the babysitting "Three-Dedicated Service" (Dedicated person, dedicated vehicle, and dedicated garage).
- Oriented towards the full lifecycle, this service covers all products both within and beyond the warranty scope to create lifelong guarantee for the products.